INSTRUCTION MANUAL

MODEL 103A

NANOVOLT AMPLIFIER

KEITHLEY INSTRUMENTS

WARRANTY

We warrant each of our products to be free from defects in material and workmanship. Our obligation under this warranty is to repair or replace any instrument or part thereof which, within a year after shipment, proves defective upon examination. We will pay domestic surface freight costs.

To exercise this warranty, call your local field representative or the Cleveland factory, DDD 216-248-0400. You will be given assistance and shipping instructions.

REPAIRS AND RECALIBRATION

Keithley Instruments maintains a complete repair service and standards laboratory in Cleveland, and has an authorized field repair facility in Los Angeles and in all countries outside the United States having Keithley field representatives.

To insure prompt repair or recalibration service, please contact your local field representative or the plant directly before returning the instrument.

Estimates for repairs, normal recalibrations, and calibrations traceable to the National Bureau of Standards are available upon request.

CONTENTS

	Section	Page
	SPECIFICATIONS	1
1.	GENERAL DESCRIPTION	2
2.	OPERATION	4
3.	APPLICATIONS	12
4.	ACCESSORIES	13
5.	CIRCUIT DESCRIPTION	16
6.	REPLACEABLE PARTS	23
	SCHEMATICS	35

Digitized by the Internet Archive
in 2025

https://archive.org/details/manualsplus_05061

SPECIFICATIONS

INPUT: Differential or single-ended (front-panel switch-selected).
GAIN: 100 to 10,000 in three calibrated decade steps, continuously adjustable between steps to a minimum gain below 10.
GAIN ACCURACY: ±1% at 100 Hz.
GAIN STABILITY: Better than 0.05%/°C.
INPUT IMPEDANCE: Differential: 1000 megohms shunted by 20 pF either input to ground. Single-ended: 50 megohms shunted by 30 pF.
FREQUENCY RESPONSE (Wideband): -3 dB at 0.1 Hz and 300 kHz; ±1% 1 Hz to 30 kHz.
FREQUENCY CUTOFFS: Hi Cuts: -3 dB at 10 Hz to 300 kHz in 1X and 3X steps. Lo Cuts: -3 dB at 0.1 Hz, 1 Hz and 10 Hz to 10 kHz in 1X and 3X steps.
INPUT NOISE FIGURE*: Better than 3 dB from a 1 kilohm source between 2 kHz and 10 kHz, also from 100 kilohms to 100 megohms below 1 kHz. Typically better than 0.02 dB at 1 kHz from 300 kilohms.
NOISE* (Input Shorted): Less than 4.2 nanovolts rms per root Hz at 2 kHz. Less than 15 nanovolts rms per root Hz at 10 Hz.
(* Single-ended input noise is specified; multiply voltage noise by 2 for differential input.)

CMRR: Greater than 70 dB, 10 Hz to 10 kHz.
CMV: 1 volt peak-to-peak maximum to 10 kHz, decreasing to 30 mV p-p at 300 kHz.
MAXIMUM INPUT OVERLOAD: 20 volts peak-to-peak normal-mode or common-mode.
OVERLOAD INDICATION: An indicator lamp shows input or output overload to 100 kHz and common-mode overload to 10 kHz.
TOTAL HARMONIC DISTORTION: Less than 0.1%.
OUTPUT: 10 volts peak-to-peak to 100 kHz, 3 V p-p to 300 kHz.
OUTPUT RESISTANCE: 1 kilohm.
WARM-UP: 15 minutes.
CONNECTORS: Input and Output (front), BNC; Power (rear), Amphenol 126-1429.
POWER: ±18 volts dc ±5% regulated to ±0.1%. 50 milliamperes from both + and -.
DIMENSIONS, WEIGHT: Style M 3-1/2" half-rack, overall bench size 4" high x 8-1/2" wide x 12-1/4" deep (100 x 217 x 313 mm). Net weight, 6 lbs. (2,6 kg).
ACCESSORIES FURNISHED: One Model 1083 Power Cable, 3 feet, connects Model 103A to Model 1031A Power Supply or to Model 840 AUTOLOC™ Amplifier auxiliary power output.

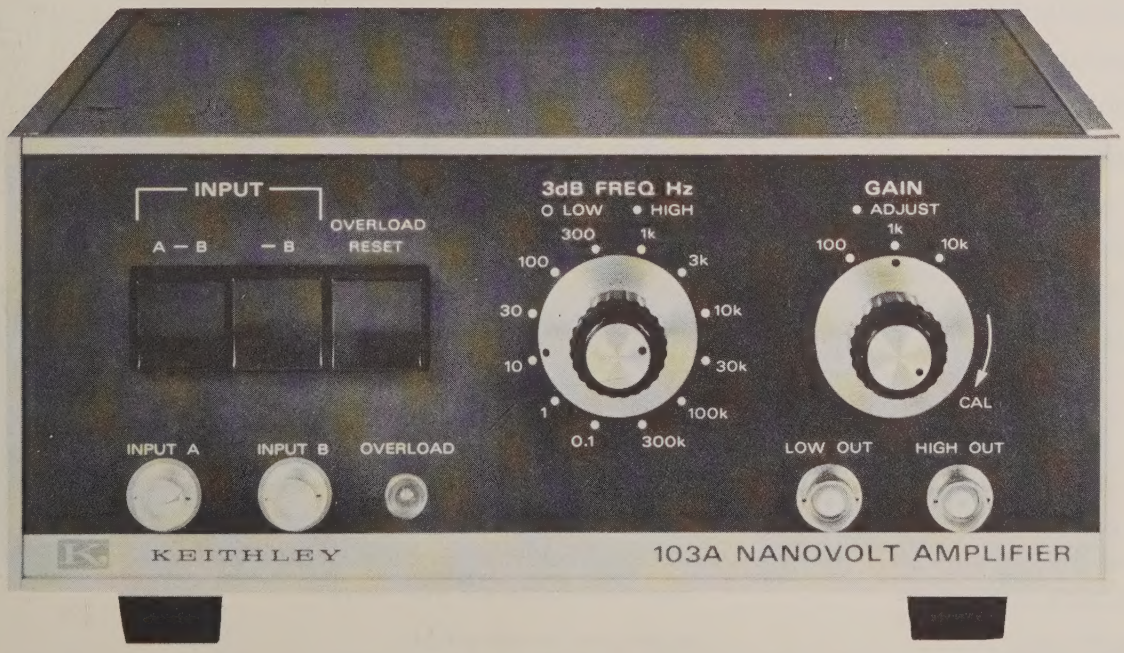

SECTION 1. GENERAL DESCRIPTION

1-1. GENERAL. The Model 103A Nanovolt Amplifier is an ac amplifier intended for use in high-gain low-noise applications.

1-2. FEATURES.

a. Selectable Input Mode. The input mode can be set for either single-ended or differential configuration to match the source.

b. Adjustable Frequency Response. A combination of high cut and low cut filter sections permit selection of optimum frequency bandwidth.

c. Overload Indication. An automatic overload indication circuit detects overloads under various operating conditions.

d. High Output Level. The full scale output is ten volts pk-to-pk (d-c coupled) to easily drive a recorder, amplifier, or oscilloscope without further amplification.

TABLE 1-1.
Front Panel Controls and Terminals

Control or Terminal	Functional Description	Paragraph
INPUT Switch (S201B)	Sets input mode as follows:	
A-B Input	Differential Mode.	2-4, a
-B Input	Single Ended Mode.	2-4, a
OVERLOAD RESET Switch (S201A)	Activates overload reset circuitry.	2-4, a
3 dB FREQ Hz Switch	Sets overall amplifier frequency response.	2-4, a
HIGH Filter (S301A)	Sets High Cut	
LOW Filter (S301B)	Sets Low Cut	
GAIN Switch (S302)	Sets overall gain, in 20 dB steps.	2-4, a
GAIN ADJUST Control (R306)	Adjusts gain over 20 dB span.	2-4, a
INPUT A (J202)	Non-inverting Input receptacle.	2-2, a
INPUT B (J201)	Inverting Input receptacle.	2-2, a
HIGH OUT (J301)	High output receptacle.	2-2, b
LOW OUT (J302)	Low output receptacle.	2-2, b
OVERLOAD Lamp (DS101)	Indicates overload condition.	2-5, d

TABLE 1-2.
Rear Panel Controls and Terminals

Control or Terminal	Functional Description	Paragraph
POWER INPUT (P301)	Input receptacle for ±18V power.	2-2, c
DC OUTPUT ADJ. Control #1 (R312) Control #2 (R311)	Adjusts dc output offsets.	2-5, i

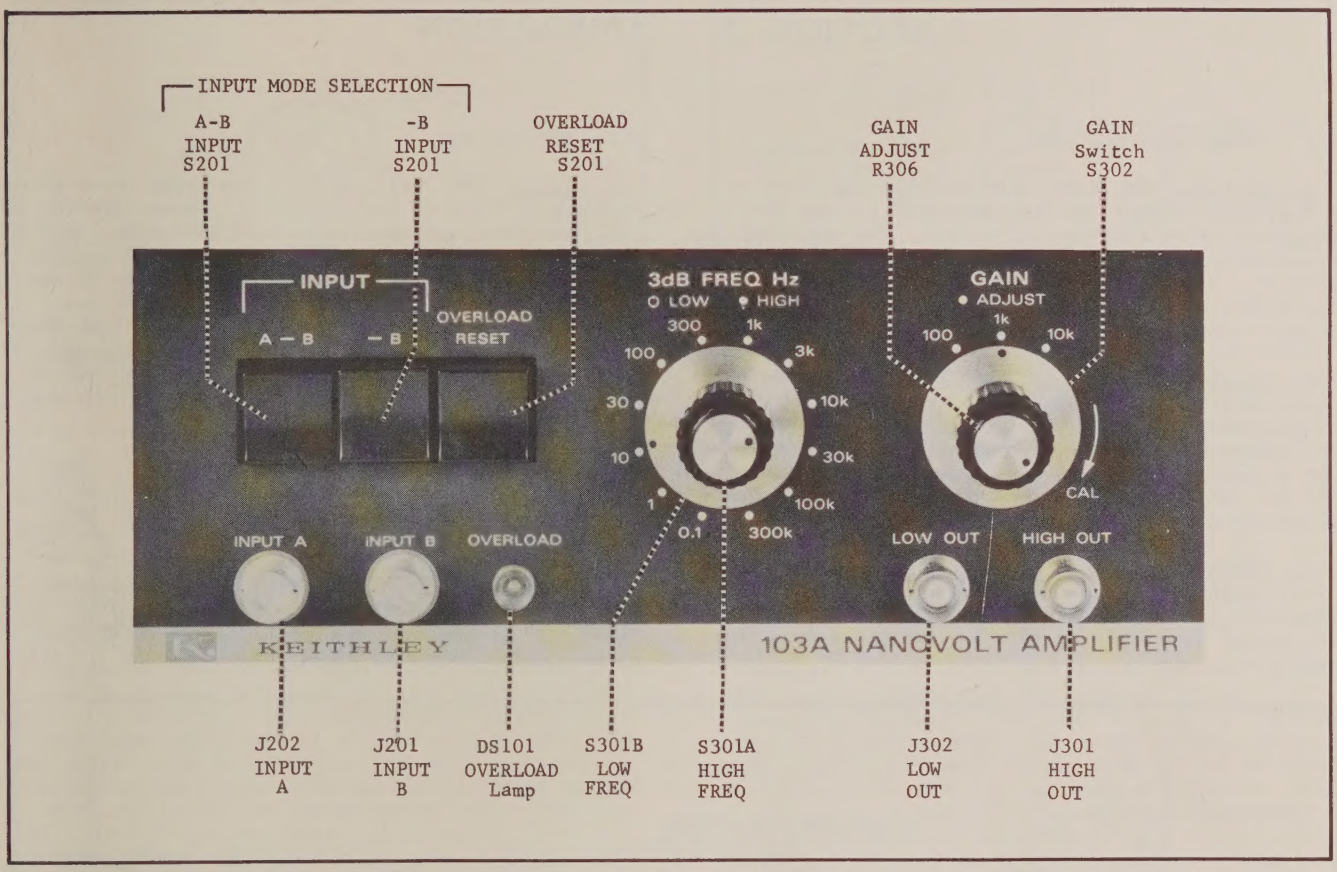

FIGURE 2. Front Panel Controls and Terminals.

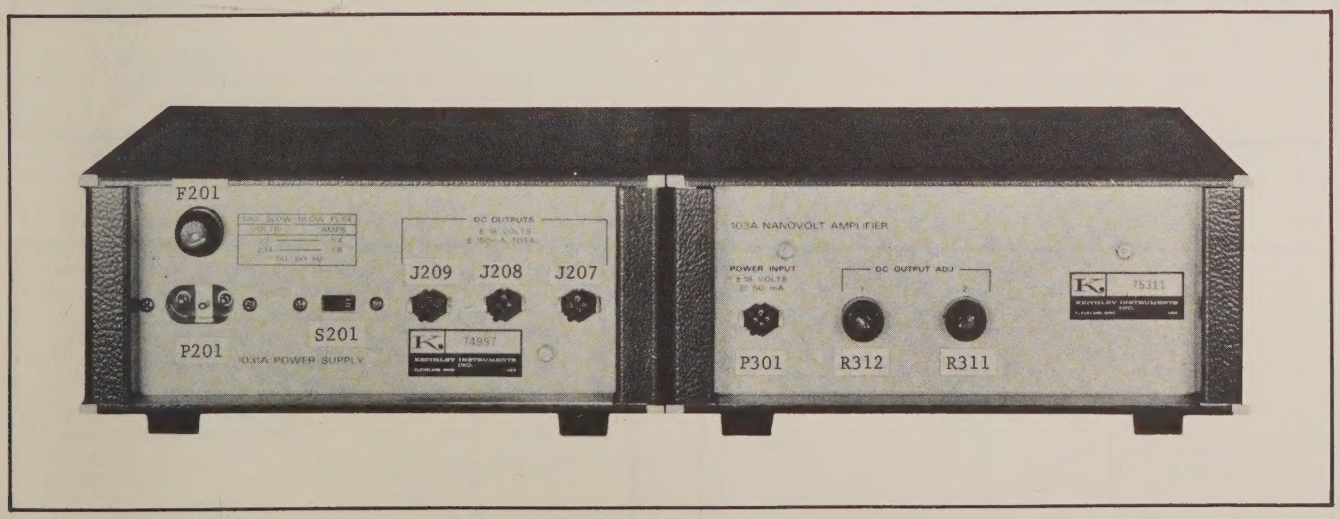

FIGURE 3. Rear Panel - Models 103A and 1031A.

SECTION 2. OPERATION

2-1. THEORY OF OPERATION.

a. General. The Model 103A Nanovolt Amplifier is a high gain voltage amplifier designed for use with single ended or differential inputs. The amplifier is essentially composed of two high impedance input amplifiers, a summing amplifier, a combination high-low cut filter section, two stages of X10 gain, and an output buffer amplifier as shown in Figure 4.

b. Single-Ended Mode (-B INPUT). In this mode the input amplifiers are connected together to form a single-ended inverting amplifier as shown in Figure 5. The signal at INPUT B will be amplified and inverted. The signal at INPUT A is not connected. Amplifiers "A" and "B" are summed to provide very low noise characteristics.

c. Differential Mode (A-B INPUT). In this mode the input amplifiers are connected as separate amplifiers which are summed differentially as shown in Figure 6. The output is a function of A-B times the gain of the amplifier.

2-2. CONNECTIONS.

a. Input. The Model 103A has two input receptacles designated "INPUT A" and "INPUT B". These receptacles (J201 and J202) are BNC types which mate with coaxial cables such as Keithley Models 8201 and 8202 coaxial cables. The inner contact of each receptacle is the circuit high. The outer shell is the circuit low which is floating with respect to the Model 103A chassis. Only INPUT B should be used for single-ended input operation. For differential operation both inputs should be used. A complete discussion of input modes is given in Section 2-5.

b. Output. The Model 103A has two output receptacles designated "LOW OUT" and "HIGH OUT". These receptacles (J301 and J302) are BNC types which mate with coaxial cables such as Keithley Models 8201 and 8202 coaxial cables. The inner contact of "LOW OUT" receptacle is at circuit low (the same as the outer shell of INPUT A and INPUT B). The inner contact of "HIGH OUT" is the amplified output. The outer shell of each "OUT" connector is at chassis ground. There

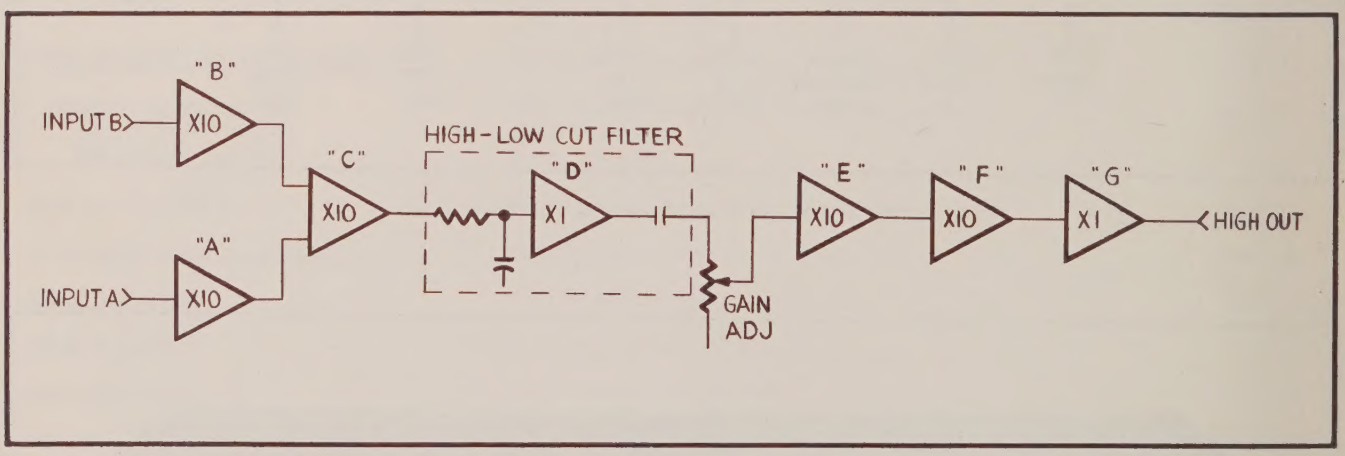

FIGURE 4. Overall Block Diagram.

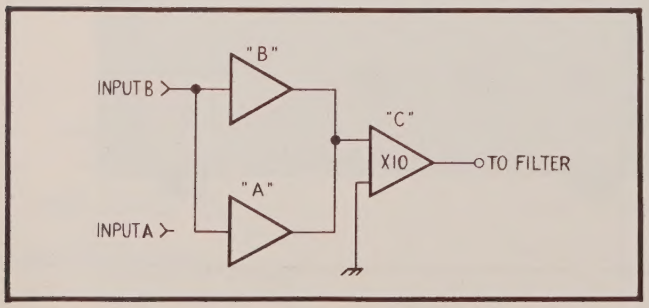

FIGURE 5. Single-Ended Mode.

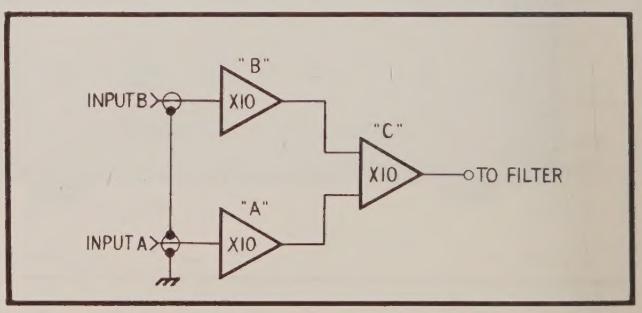

FIGURE 6. Differential Mode.

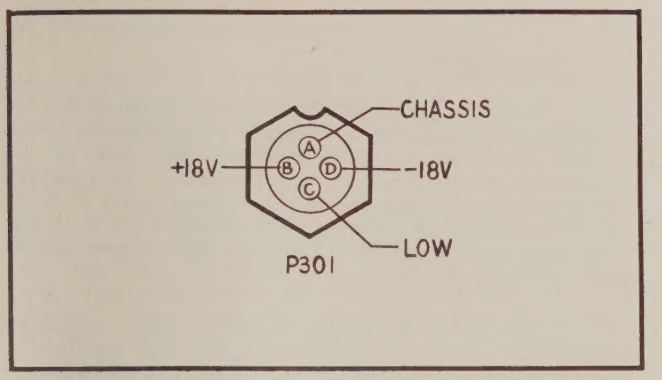

FIGURE 7a. Power Receptacle.

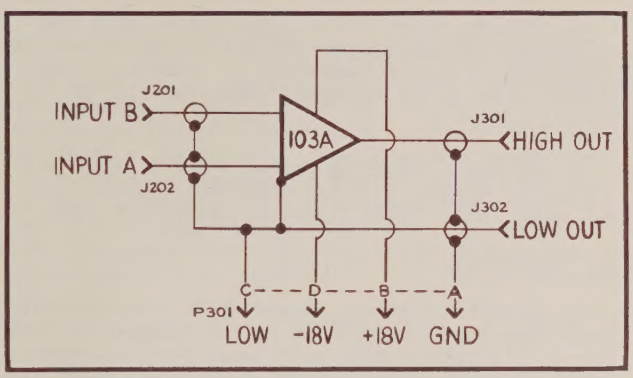

FIGURE 7b. Power Input Connection.

is no connection between circuit low and chassis ground within the Model 103A itself. Connection can be made via the power supply used with the Model 103A. A complete discussion of low to ground connections is given in Section 2-2 c.

c. Power Input. The Model 103A has a special four terminal receptacle on the rear panel for input power connections. This receptacle (P301) is an Amphenol 126-214 connector which mates with Keithley Model 1083 Power Cable. The four terminals are designated A, B, C, and D as shown in Figure 7a. The Model 1083 Power Cable can be used to connect with the Model 840 Auxiliary Power receptacle or any one of three power receptacles on the Model 1031A. To avoid unnecessary ground loops the Model 103A has been designed so that circuit low to chassis ground connection is made at only one point in the power supply (either Model 840 or Model 1031A). If a different power supply is used (a regulated supply or batteries) the connection between circuit low to chassis ground should be made at the supply using a 10 ohm resistor.

2-3. MEASUREMENT CONSIDERATIONS.

a. Noise Sources. The electrical source applied to the input of any amplifier can be composed of voltages or currents which obscure the signal of interest. These extraneous noise signals represent the electrical uncertainty and can be classified in three general categories: Random, "1/f", and discrete frequency.

1. Random Noise. This type of noise has a characteristic of constant energy per unit bandwidth. Random noise should be distinguished as to noise generated in the source and noise in the signal recovery system. An essential characteristic of resistive sources is thermal or "Johnson" noise, due to the thermal motion of electrons in the material of the resistor. Its instantaneous amplitude is unpredictable, but the statistical probability that it will have an amplitude in an interval dV volts is given by p(V)dV, where p(V) is the Gaussian probability density function:

$$p(V) = \frac{1}{(2\pi\sigma^2)^{\frac{1}{2}}} \left(e^{-V^2/2\sigma^2} \right) \qquad \text{Eq. 1}$$

where the parameter σ is the rms value of the fluctuations and the quantity universally accepted to describe the noise output from a resistor.

$$\sigma = E_{JN} = (4kTR_sB)^{\frac{1}{2}} \qquad \text{Eq. 2}$$

where k = Boltzmann's constant = 1.38×10^{-23} J/°K; T = resistor temperature, °K; R_s = resistance, ohms; and B = noise bandwidth, hertz. Johnson noise is "white noise"; that is, its rms value per unit bandwidth (rms density) is constant from dc to frequencies extending into the infrared region. For analytical purposes, the noisy resistor is represented by a noiseless resistor and a noise voltage generator. The source-resistance Johnson noise is the minimum possible noise that can accompany the signal. Other types of noise from other sources may obscure the signal as well, but the Johnson noise will always be present. Besides the Johnson noise that arises in the source resistance, there is additional Johnson noise produced by resistors in the amplifier.

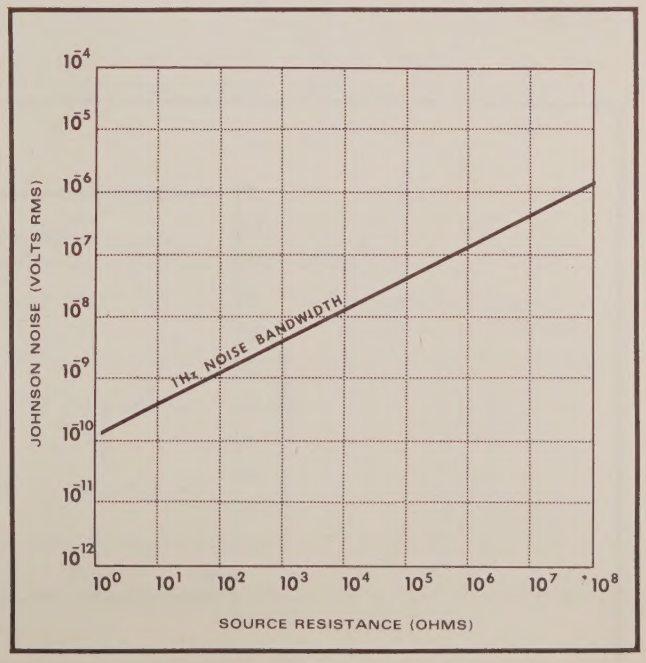

FIGURE 8. Johnson Noise/$\sqrt{Hz}$ Versus Source Resistance.

2. Flicker noise (1/f). This noise has a characteristic of constant energy per percent bandwidth. Random noise such as generated by tubes and transistors shows a low frequency characteristic or 1/f relationship.

3. Discrete Frequency Noise. This is noise generated by various discrete frequency sources such as power lines, radio frequency generators, etc.

b. Shielding.

1. Electric Fields. Shielding is usually necessary when the instrument is in the presence of very large ac fields or when very sensitive measurements are being made. The shields of the measurement circuit and leads should be connected together to ground at only one point. This provides a "tree" configuration, which minimizes ground loops.

2. Magnetic Fields. Magnetic shielding is useful where very large magnetic fields are present. Shielding, which is available in the form of plates, foil or cables, can be used to shield the measuring circuit, the lead wires, or the instrument itself.

c. Grounding. The Model 103A has been designed to operate with either the Model 1031A Power Supply or the Model 840 Amplifier. The circuit low is isolated from chassis ground by a 10 ohm resistor in the power supply. For best results, no other connection should be made between circuit low and chassis ground. Since the Model 103A chassis is connected to earth ground through the accessory power cable, it is not necessary to connect the Model 103A chassis to ground. When the Model 103A is connected to the Model 840 differential input (as shown in Figure 15), the CMRR of the Model 840 minimizes the effects of ground loops.

2-4. CONTROLS.

a. Front Panel.

1. INPUT Switches (S201B). These switches are pushbutton types with two normal configurations. The switch positions are designated as "A-B" and "-B". These two pushbuttons are interlocked so that depressing one will release the other automatically. However it is possible to depress both or have both buttons released but these conditions are not useable modes of operation.

2. OVERLOAD RESET Switch (S201A). This switch is a momentary contact pushbutton type. The overload reset circuit is activated only when the pushbutton is depressed. When the OVERLOAD Indicator light goes off the reset has been accomplished.

3. 3dB FREQ Hz (S301). This switch is a dual-concentric type. The inner dial sets the "HIGH Cut" filter in ten positions from 10 Hz to 300 kHz. The outer dial sets the "LOW Cut" filter in nine positions from 0.1 to 10 kHz.

4. GAIN. Gain is set by use of a dual-concentric GAIN switch S302 and GAIN ADJUST control R306. The GAIN ADJUST control has a "CAL" position when set to fully clockwise.

b. Rear Panel.

1. DC OUTPUT ADJ "1" (R312).
2. DC OUTPUT ADJ "2" (R311).

These controls adjust the dc output offset.

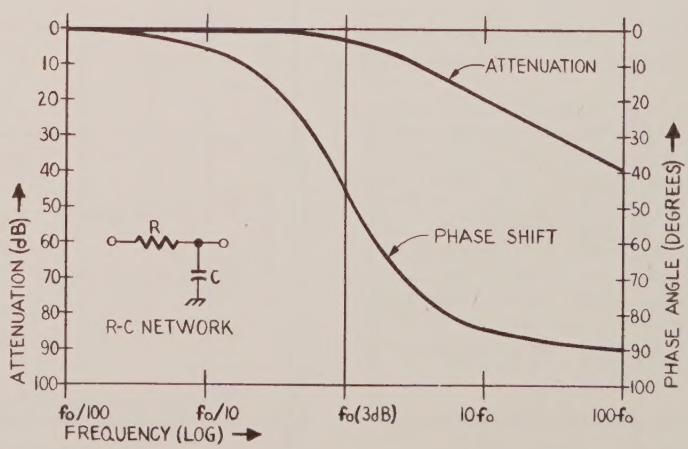

FIGURE 9. Gain/Phase Vs. Frequency For R-C Type Filter.

2-5. OPERATING CONSIDERATIONS.

a. Input Mode. The Model 103A provides several input modes to accommodate either single ended or differential input connections. The INPUT Switch (S201B) has two pushbuttons designated "A-B" and "-B" respectively.

1. Single-ended Operation. This mode of operation is selected by depressing the "-B" pushbutton. The amplifier is thereby connected as an inverting amplifier such that a positive going signal at INPUT B will result in an amplified negative going output. When the "-B" pushbutton is depressed (completely) the "A-B" pushbutton is released automatically thereby disabling INPUT A (such that a signal connected to INPUT A will not be amplified).

2. Differential Operation. This mode of operation is selected by depressing the "A-B" pushbutton. The amplifier is thereby connected as a differential amplifier such that the output will be the algebraic difference between the signals simultaneously applied to INPUT A and INPUT B. When the "A-B" pushbutton is depressed (completely) the "-B" pushbutton is released automatically. The signal applied to INPUT A will always be amplified noninverting such that the output polarity will be the same as the input polarity at INPUT A.

NOTE

The INPUT mode switch (S201B) is designed such that a total of four switch configurations are possible. These are summarized as in Table 2-1.

TABLE 2-1.
INPUT Mode Switch Configuration

Pushbutton Positions A-B	-B	Gain	Output With Positive Signal Applied Simultaneously to INPUT A and INPUT B
Released	Depressed	Normal	INPUT B is amplified and inverted.
Depressed	Released	Normal	INPUT A minus INPUT B is amplified.
Depressed	Depressed	Uncalibrated	Do not use this mode.
Released	Released	Uncalibrated	Do not use this mode.

b. LOW-HIGH Cut Filters. The LOW and HIGH Cut Filters are adjustable by means of a dual-concentric switch designated S301. The filter positions represent the "3dB down" frequencies for the overall amplifier. The LOW switch (S301B) has nine positions calibrated in steps from 0.1 Hz to 10 kHz. The HIGH switch (S301A) has ten positions calibrated in steps from 10 Hz to 300 kHz. Since the two switches are designed to function in overlapping frequency steps, it is possible to set the switches for a LOW cut at 10 kHz and a HIGH cut at 10 Hz, although the amplifier response (for this condition) would be extremely compressed. Therefore, for best results, the switches should always be set such that the LOW cut switch position does not overlap the HIGH cut switch position. The gain accuracy of the amplifier is affected by the position of the LOW and HIGH cut filters. The error introduced by specific filter positions is given in Table 2-2.

TABLE 2-2.
Gain Attenuation Due to Filter Settings.

Operating Frequency Hz	LOW Cut Setting Hz	HIGH Cut Setting Hz	Amplitude Error at Operating Frequency
1 k	100	100 k	1/2 %
1 k	10	10 k	1/2 %
1 k	100	10 k	1 %
1 k	300	10 k	5 %
1 k	100	3 k	5 %
1 k	300	3 k	10 %
1 k	300	1 k	32 %
1 k	1 k	1 k	50 %

TABLE 2-3.
Gain Settings of Model 103A

GAIN Switch Setting	GAIN ADJUST Setting	Overall Gain (G) Possible	Calibrated (Yes or No)
100	CAL	G = 100 (40 dB)	YES
100	Fully CCW	G < 10	NO
1 k	CAL	G = 1000 (60 dB)	YES
1 k	Fully CCW	G < 100	NO
10 k	CAL	G = 10000 (80 dB)	YES
10 k	Fully CCW	G < 1000	NO

c. Gain. The gain of the Model 103A is set by a dual-concentric GAIN control composed of GAIN switch S302 and GAIN ADJUST control R306. The GAIN ADJUST control is a variable gain-attenuation potentiometer. This control can be adjusted from 0 to over 20 dB attenuation. The outer GAIN switch (S302) provides amplifier gains in three steps; 100 (40 dB), 1k (60 dB), and 10k (80 dB). The gain of the Model 103A is calibrated only when the GAIN ADJUST is set to "CAL" or 0 dB position. The gain can be set through the use of both controls as shown in Table 2-3.

d. Overloads. Although the Model 103A amplifier is ac coupled to the input, the amplifier has been designed to have a very low frequency response. Therefore the internal circuits have very long time constants. The long time constants affect the operation of the Model 103A under input overloads and power turn-on conditions. Three types of overloads must be considered in this discussion.

1. Transient Overloads. Transient overloads can occur from power turn-on, dc input transients, and severe line voltage transients. When power is applied to the Model 103A power input terminals the long time constants of the ±18 volt filtering circuits can cause a transient overload condition as indicated by the OVERLOAD lamp (DS101). The lamp may remain lighted up to two or three minutes until the transient condition is diminished. After approximately one minute the OVERLOAD RESET pushbutton should be depressed to reduce the effects of the transient overload. If a large dc offset is applied to the input terminals a transient overload condition can occur indicated by the OVERLOAD lamp. The OVERLOAD RESET pushbutton can be depressed to reduce the effects of the transient overload. Very severe power line transients can cause a transient overload very similar to power turn-on overloads.

NOTE

When the Model 103A is set for maximum gain (10k) overloads up to 100X full scale (100 mV P-P) can be applied and the Model 103A will recover as soon as the overload is removed. This feature is a result of d-c coupled amplifiers (post filter) which have fast recovery times.

2. Prefilter Overloads. Overloads can occur ahead of the HIGH-LOW cut filter which may not cause an overload at the output. Since a prefilter overload may occur due to large amplitude noise signals, the overload is sensed and the OVERLOAD indicator is lighted whenever an overload condition is present. However, prefilter overloads above 100 kHz may not be detected.

3. Steady-State Overloads. Overloads can occur in the output stages due to saturation. Since the output will saturate when driven beyond 10 volts peak-to-peak, the OVERLOAD indicator will be lighted as long as this condition exists. To remove the overload condition, the GAIN setting can be reduced, the input signal can be attenuated, or filtered through the use of the HIGH-LOW cut filters. The OVERLOAD RESET button can be used to restablish normal bias conditions in the amplifier.

NOTE

When the RESET button is depressed, the input impedance is reduced as follows:
Input to ground is 50 kΩ (for single-ended)
Input to ground is 100 kΩ (for differential)

e. Power Supply.(Model 1031A). The Model 103A must be powered by an external power supply since no internal power is provided. The power required by the Model 103A is ±18 volts at up to 50 milliamperes current. Since the Model 103A is primarily designed for use with the Model 840 AUTOLOC Amplifier, the power for the Model 103A can be supplied by the Model 840 auxiliary power output. In this situation, the Model 103A would be energized only when the Model 840 power switch was on. When the Model 103A is used separately, the Model 1031A Power Supply should be used.

f. Signal-to-Noise Ratio. The Signal-to-Noise Ratio (SNR) is a quantitive expression for the relative amount of noise which would tend to obscure the signal of interest. In order to evaluate the SNR for the amplifier it is necessary to identify all noise sources associated with the amplifier as well as the source itself. For the purpose of evaluating the Model 103 the equivalent circuit of Figure 10 will be used. The Model 103A has been characterized as a noiseless amplifier with the following noise generating or frequency dependent factors.

1. Noise Generators
   - En = Voltage Noise of Amplifier.
   - In = Current Noise of Amplifier.
   - ER1 = Voltage Noise (Thermal) of Input Resistor.
   - ERS = Voltage Noise (Thermal) of Source Resistor.

2. Impedance Factors
   - *R1 = Resistance of the Amplifier Input.
   - *R_S = Resistance of the Source.
   - C_1 = Capacitance Shunting the Input (Total).
   - * or Re = R_1 // R_S = Equivalent Resistance at Input.

The output of the Model 103A is the amplified signal $E_S A_O$ plus the total noise referred to the output E_T where:

$$E_T = \left(\frac{4kTRe}{1+\omega^2 Re^2 C^2} + \frac{In^2 Re^2}{1+\omega^2 Re^2 C^2} + En^2\right)^{\frac{1}{2}} fn^{\frac{1}{2}} \; Ao \qquad \text{Eq. 3}$$

f_N = noise bandwidth

$$\text{Therefore SNR} = \frac{E_S A_O}{E_T} \qquad \text{Eq. 4}$$

A popular figure of merit based upon the SNR is called the amplifier "Noise Figure". The Noise Figure (NF) is usually expressed in decibels according to the following definition. Eq. 5a

$$NF = 10 \log_{10} \left(\frac{\text{Total Noise}}{\text{Thermal Noise of Source}}\right)^2$$

Using the parameters derived from the equivalent circuit of Figure 10 the NF for the Model 103A can be expressed as follows: (for a 1 Hz noise bandwidth) Eq. 5b

$$NF = 10 \log_{10} \left(\frac{4kTRe + (1+\omega^2 Re^2 C^2)En^2 + In^2 En^2}{4kTRe^2}\right) Rs$$

An analysis of NF as shown in equation 5b indicates the following.

1. For an amplifier driven from a voltage source ES the NF is maximum when R_S = 0.

2. For a given source resistance, the smallest NF indicates the least noisy amplifier. Therefore a "noiseless" amplifier has a NF of 0 dB since E_N = 0, I_N = 0.

However consideration should be given to the useability of very low NF when measuring a relatively noisy or high-level signal. An example would be a comparison of two different amplifiers under the same experimental conditions where R_S = 100 ohms and f_n = 100 Hz. Assume amplifier 1 has a NF of 20 dB while amplifier 2 has a NF of 3 dB. From the comparison amplifier 2 would appear to be the better amplifier although at greater expense. The total equivalent noise (referred to the input) would be 130 nV and 18 nV for amplifiers 1 and 2 respectively. However if the input signal level for the particular experiment was 1-μV rms then the noise contribution from either amplifier is small compared to the signal of interest. Thus the less expensive instrument (amplifier 1) would be the choice where economy is important.

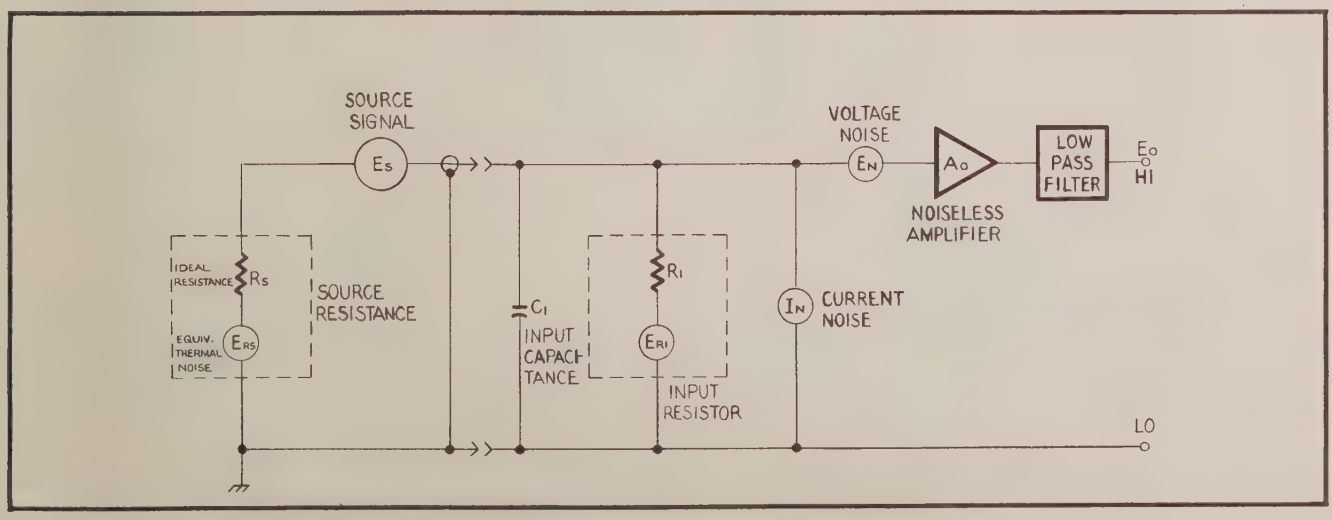

FIGURE 10. Equivalent Circuit For Noise Analysis.

g. Impedance Matching. The maximum SNR can be obtained by optimizing both frequency and source impedance. Since the frequency is usually established by the particular experiment or reference generator, impedance matching will provide the most significant improvement of SNR for the majority of applications. The optimum resistance R_{opt} is determined as follows:

$$R_{opt} = \frac{E_N}{I_N} \text{ (ohms)} \qquad \text{Eq. 6a}$$

A matching transformer such as Keithley Model 1037 can be used to improve the SNR when using very low source resistances. For an ideal transformer the resistance reflected across the amplifier input can be expressed as follows:

$$R = a^2 R_S \qquad \text{Eq. 6b}$$

where a = turns ratio of transformer
R = reflected resistance as a function of the actual source resistance R_S.

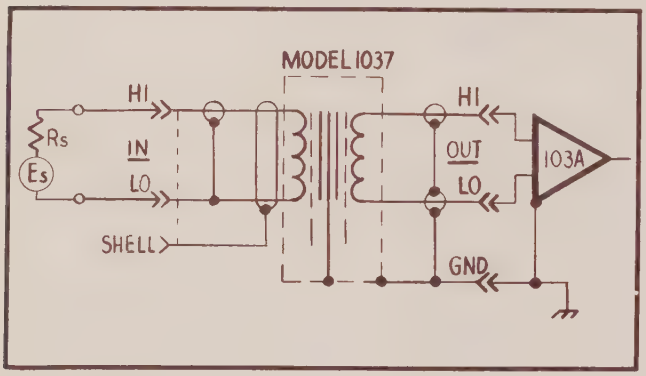

FIGURE 11. Use of Model 1037 Transformer.

h. Noise Bandwidth. For a wide band amplifier the noise bandwidth can be defined in terms of the established signal bandwidth. The signal bandwidth for the Model 103A is a function of the high and low cut 3 dB frequencies as in equation 7.

$$\text{Signal Bandwidth} = \Delta f = (f_2 - f_1) \qquad \text{Eq. 7}$$

The noise bandwidth (NBW) for rms random noise in a spectrum from 0 Hz to ∞ is given by equation 8.

$$NBW = \frac{1}{A^2} \int_0^\infty |A_S|^2 \, df \qquad \text{Eq. 8}$$

where A = Gain Setting
A_S = System Gain

System gain can be defined in terms of the 3 dB frequencies of the Model 103A as in equation 9.

$$\text{System Gain } (A_S) = \frac{A}{\left(1 - j\frac{f_1}{f}\right)\left(1 + j\frac{f}{f_2}\right)} \qquad \text{Eq. 9}$$

where f = operating frequency
f_1 = Lower 3 dB frequency
f_2 = Upper 3 dB frequency

Thus the equivalent noise bandwidth is given in equation 10.

$$NBW = \frac{\pi}{2}\left(\frac{f_2^2}{f_2^2 - f_1^2}\right)(f_2 - f_1) \qquad \text{Eq. 10}$$

$$\text{If } f_2 \gg f_1, \text{ then } NBW = \frac{\pi}{2}(\Delta f)$$

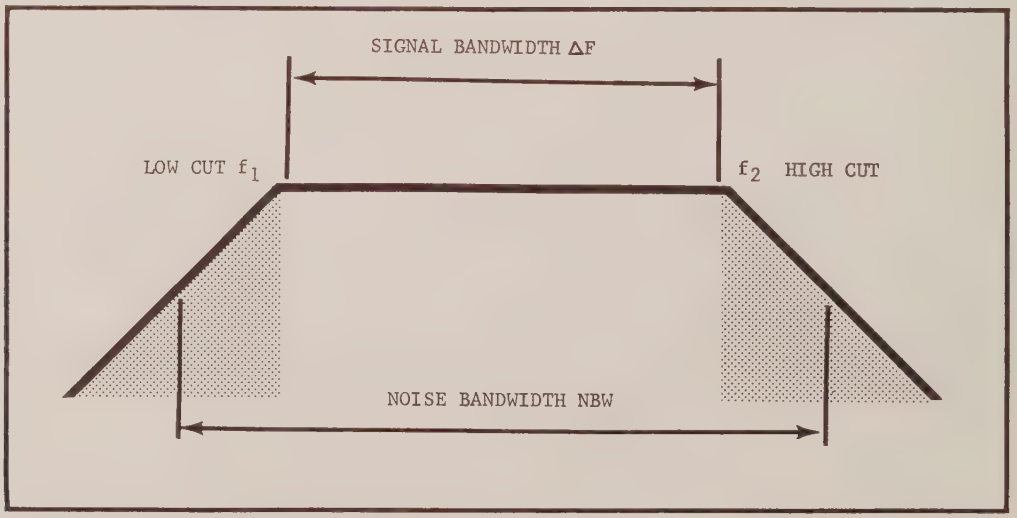

FIGURE 12. Noise Bandwidth.

i. Noise Figure Contours. The noise figure for an amplifier can be expressed in terms of a set of data for all possible operating conditions. One way to graphically portray this data is the noise figure contour. The contours are essentially the loci of data points for a specified noise figure as a function of source resistance and frequency of interest. For example, the Noise Contour shown in Figure 13a shows a locus of data points for which the noise figure is .05 dB. One set of conditions which constitute a data point on this contour would be:

Condition 1. Source Resistance = 10^6 Ω
Frequency = 10 Hz

A second set of conditions would be:

Condition 2. Source Resistance = 10^5 Ω
Frequency = 300 Hz

The noise contour is a convenient way to specify the noise performance of an amplifier for every source resistance and frequency combination over which it was designed to operate.

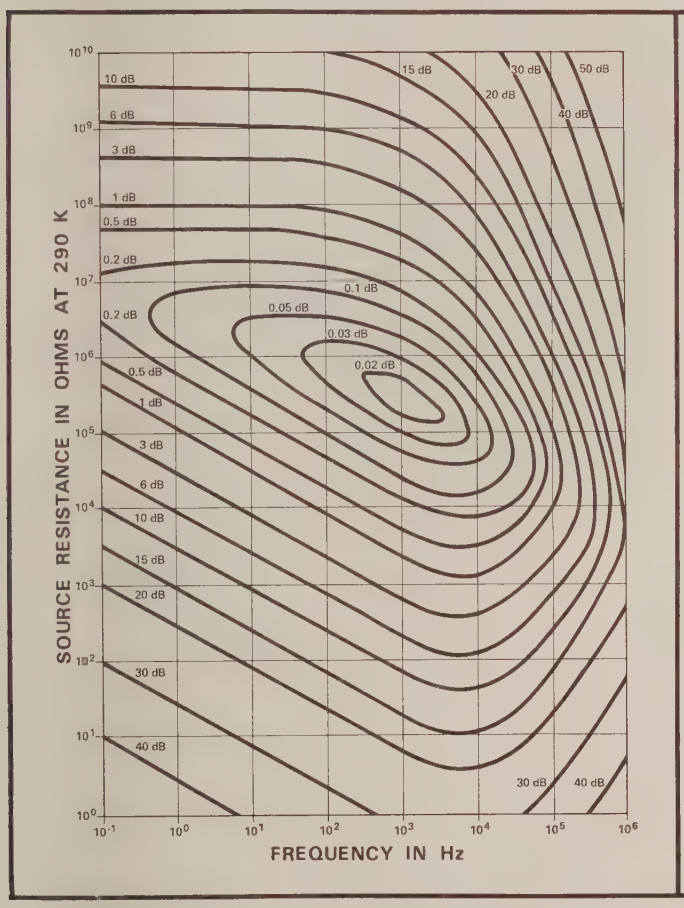

FIGURE 13a. Noise Contour Single-Ended Mode. (Typical for the Model 103A)

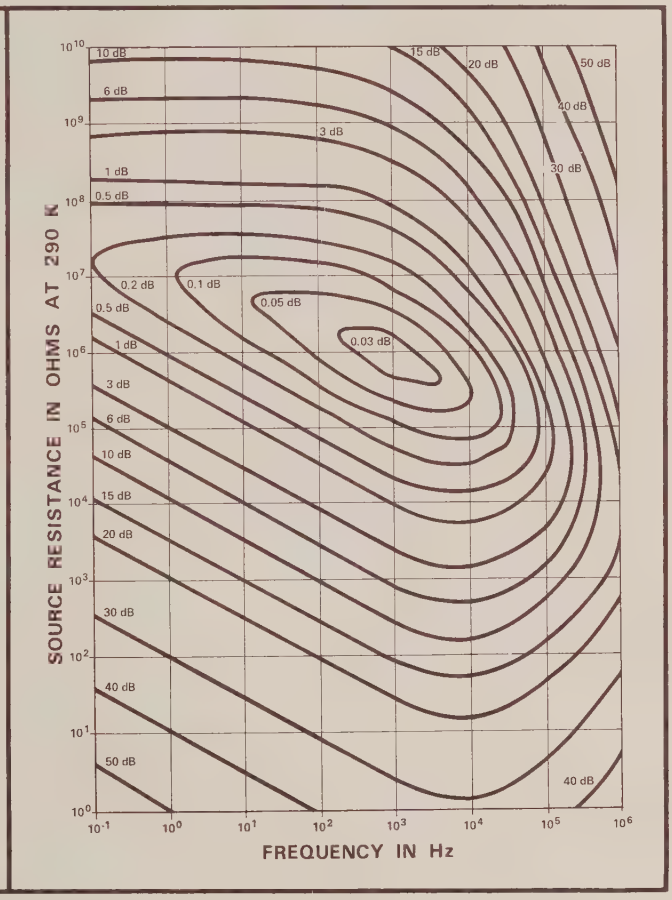

FIGURE 13b. Noise Contour Differential Mode. (Typical for the Model 103A)

j. DC Offset Adjustment. Since the output of the Model 103A is d-c coupled it may be necessary to adjust the d-c level for zero. Adjustment of the d-c level can be accomplished using the DC OUTPUT ADJ controls on the rear panel. The usefulness of these controls can be illustrated by two examples. (The d-c level can be adjusted only for gains of 1k and 10k.)

Condition 1. The Model 103A has been preset to within ±100 mV (at gain of 10k) as the case of a factory adjusted unit. When using the Model 103A with a dc coupled oscilloscope to look at low frequency signals the amplifier can be adjusted to permit display of 10 mV/division signals. For fine adjustment control #1 should be used; otherwise use control #2.

Condition 2. If the output level is not within the nominal ±100 mV at gain of 10k the following procedure should be used.

a). Set gain at 10k (CAL) and LOW cut switch to 100 Hz.
b). Adjust for output zero using control #2.
c). Depress and hold the OVERLOAD RESET.
d). Adjust for output zero using control #1.
e). Release OVERLOAD RESET and repeat b),c),d).

SECTION 3. APPLICATIONS

3-1. GENERAL. Although the Model 103A can be used as a general purpose instrument, a few specific applications can more fully illustrate the important features.

3-2. TYPICAL APPLICATIONS.

a. Oscilloscope Preamplifier. When used as a preamplifier for a dual input oscilloscope the Model 103A can be connected as shown in Figure 14. The oscilloscope chassis should be connected to earth ground directly. The Model 103A outputs can be connect differentially or single-ended if necessary. When connecting the Model 103A output to a single input oscilloscope, the HIGH OUT receptacle should be used. Since the Model 103A low is isolated by 10 ohms above chassis ground when powered by the Model 1031A, no other connection is required. If another power supply is used such as batteries, it is necessary to connect a 10 ohm resistor between low and chassis.

b. Lock-in System Preamplifier. When used with a phase-sensitive detector such as the Keithley Model 840 the Model 103A can be connected as shown in Figure 15. In this application the Model 103A outputs mate with the differential input of the Model 840 thereby minimizing the effects of ground loop connections. For this application the Model 840 should be set for "DIFF" input mode. Since the Model 840 accessory power output provides low and ground as well as ±18 volts, it is not necessary to connect the Model 103A chassis to earth ground.

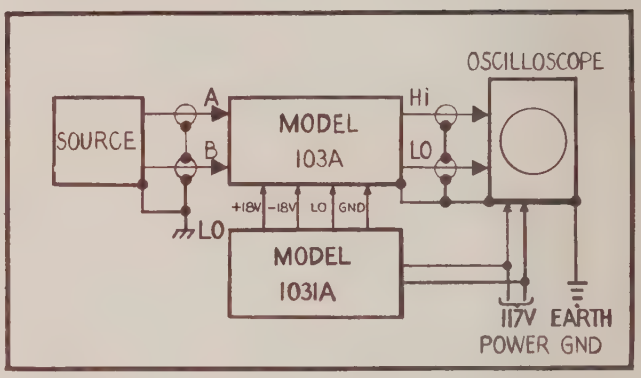

FIGURE 14. Use as an Oscilloscope Preamplifier.

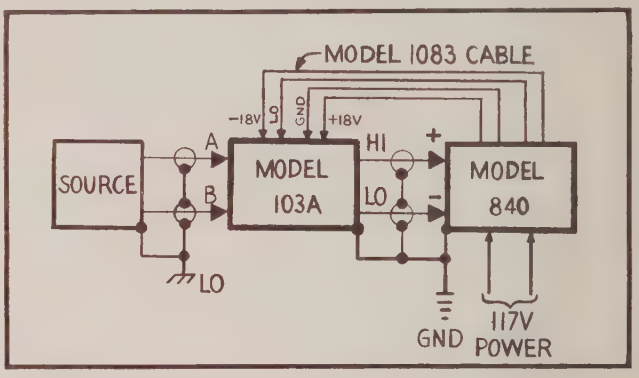

FIGURE 15. Use in System 84 Lockin Amplifier.

SECTION 4. ACCESSORIES

4-1. GENERAL. The following Keithley accessories can be used with the Model 103A to provide additional convenience and versatility.

4-2. OPERATING INSTRUCTIONS. A separate Instruction Manual is supplied with each accessory giving complete operating information.

Model 2000 Rack Mounting Kit

Description:

The Model 2000 is a rack mounting kit which converts any half-rack, Style M instrument from bench mounting to rack mounting in a standard 19-inch rack. The dimensions are 3-1/2" high x 19" wide. The hardware included in this kit consists of a blank panel which can be mounted on either side of a half-rack instrument.

Parts List:

Item No.	Description	Qty. Req'd	Keithley Part No.
21	Angle Bracket	1	24783A
22	Screws, #6-32 x 5/8, Phillips	4	-
27	Staked Panel	1	250048

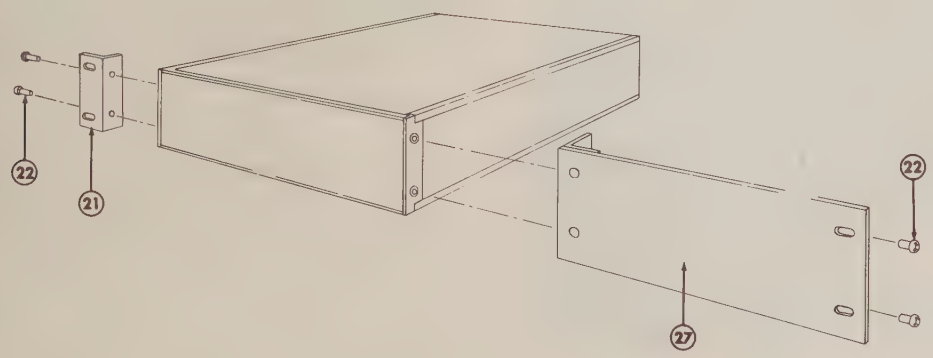

FIGURE 16. Model 2000 Rack Mounting.

Models 8201, 8202 Coaxial Cables

Description:

These cables are coaxial types with BNC connectors on each end. The Model 8201 cable is 10 inches long while the Model 8202 is 20 inches.

Application:

These cables mate with the BNC receptacles on the Models 103A and 840.

Model 1083 Power Cable

Description:

This cable is a four conductor cable (3 feet long) with Amphenol (126-1427, 126-1429) male and female connectors. The pins are identified as A, B, C, and D.

Application:

The Model 1083 can be used for power connections between: Model 1031A and Model 103A
<u>or</u> Model 840 and Model 103A.

Model 1007 Dual Rack Mounting Kit

Description:

The Model 1007 is dual rack mounting kit with overall dimensions 3-1/2" high and 19" wide. The hardware included in this kit consists of two Angle Brackets, one Mounting Clamp, and extra mounting screws.

Application:

The Model 1007 converts any half-rack, style M instrument from bench mounting to rack mounting in a standard 19-inch rack.

Parts List:

Item No.	Description	Qty Req'd	Keithley Part No.
21	Angle Bracket	2	24783A
22	Screw, #6-32x5/8, Phillips	4	-
23	Mounting Clamp	1	24798B
24	Screw, #6-32x1/2, FH Socket (original hardware)	4	-
25	Screw, #6-32x1x1/8, Phillips	1	-
26	Kep Nut, #6-32	1	-

Installation:

a. Before assembling the rack kit, determine the position of each instrument. Since the instruments can be mounted in either location, their position should be determined by the user's measurement. The following instructions refer to instruments "A" and "B" positioned as shown in Figure 17.

b. Once the position of each instrument has been determined, the "side dress" panels (Item 11) on adjacent sides should be removed. Removal is accomplished by loosening the socket head screws (Item 24) in two places. Slide the "side dress" panels to the rear of the instrument to remove.

c. The "mounting clamp" (Item 23) is installed on instrument "A" using the original hardware (Item 24). With the socket head screws removed, insert the "mounting clamp" behind the "corner bracket" (Item 7) and replace the screws to hold the mounting clamp in place.

d. Tighten the socket head screws (Item 24) on instrument "B". Insert the "mounting clamp" behind the "corner bracket" on instrument "B" as shown.

e. When mounting instruments having the same depth, a screw (Item 25) and kep nut (Item 26) are required to secure the two instruments together.

f. Attach an "angle bracket" (Item 21) on each instrument using hardware (Item 22) in place of the original hardware (Item 24).

g. The bottom cover feet and tilt bail assemblies may be removed if necessary.

h. The original hardware, side dress panels, feet and tilt bail assemblies should be retained for future conversion back to bench mounting.

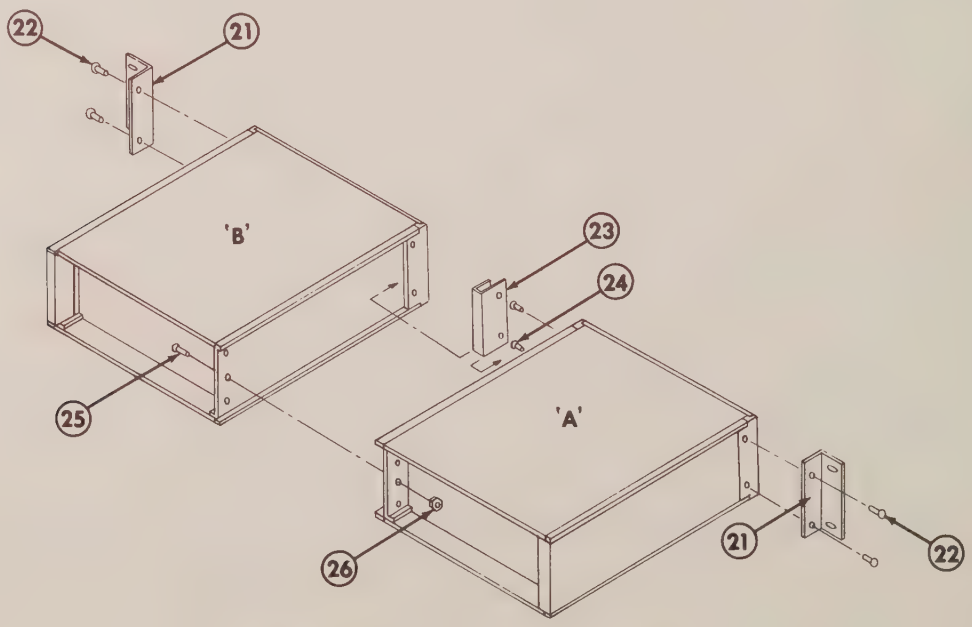

FIGURE 17. Model 1007 Dual Rack Mounting.

Model 1031A Power Supply

Description:

The Model 1031A is a regulated power supply which can deliver ± 18 volts d-c at up to a total of 150 mA.

Application:

The Model 1031A has been designed to operate one, two, or three Model 103A amplifiers. Three power output receptacles are provided on the rear panel to mate with accessory Model 1083 power cables.

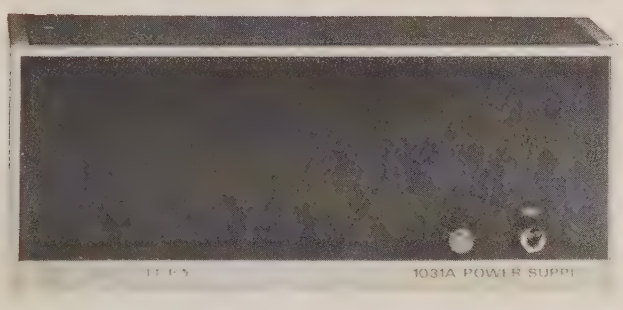

Model 1037 Transformer

Description:

The Model 1037 is an impedance matching transformer with a gain of 100. A triaxial type receptacle is provided for the primary winding connections (high, low, shield ground). A coaxial type receptacle for the secondary winding mates with Keithley Model 8202 coaxial cable.

Application:

The Model 1037 has been expressly designed for use with the Model 103A for applications that require optimum performance from source impedances below 100 ohms. It can also be used with the Model 840 directly to give 100 nV full scale (1 kΩ input impedance at 100 Hz).

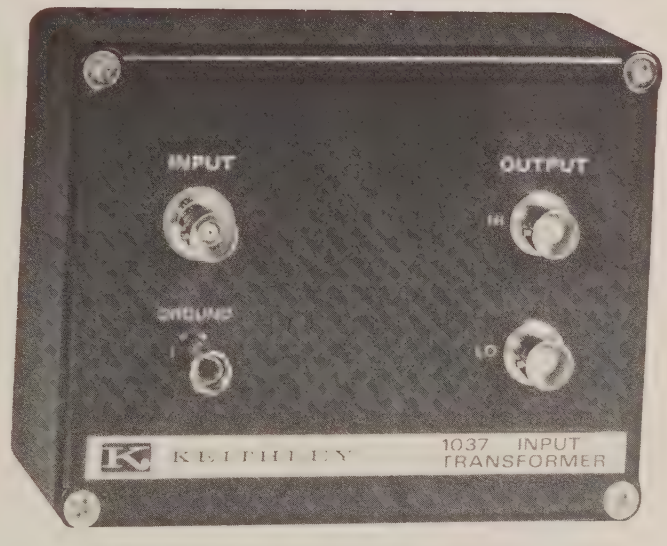

Specifications:

Turns Ratio: 1 to 100
Input and Output: Floating Differential
Input Impedance: 1 kilohm at 100 Hz (2H)
Maximum Input: 200 mV P-P, 10 mV d-c
Frequency Response: ±3% from 5 Hz to 1 kHz (from a 10 ohm source)
Noise Figure: Better than 3 dB between 5 Hz and 1 kHz (from a 10 ohm source)
Noise(input shorted): Less than 0.4 nV per root Hz between 5 Hz and 1 kHz
CMRR: Greater than 110 dB (below 1 kHz)
CMV: 100 v P-P maximum
Recommended Load: Greater than 10 megohms
Connectors: Input, Triaxial; Output, Two BNC Types
Dimensions, Weight: 3-1/8 high x 4-5/8 wide x 3-5/8 deep inches (80 x 119 x 94 mm), Net weight, 20 oz
Accessories Furnished: 1- Model 6011 Triaxial cable
2- Model 8202 BNC cables (20")

Degaussing Procedure:

The input of the Model 1037 is direct coupled with a d-c resistance of about two ohms. The transformer core will be saturated by a d-c current of approximately 5 mA. A higher current will tend to magnitize the core and therefore increase the microphonic noise in the transformer. To demagnitize the core (degauss) apply a 100 mV P-P sine wave at 20-30 Hz. Slowly decrease the amplitude of the sine wave to zero.

NOTE:
Do not apply more than 1 volt d-c to the Model 1037 since the transformer windings may be damaged.

SECTION 5. CIRCUIT DESCRIPTION

5-1. GENERAL. The Model 103A is composed of a main amplifier, overload sensing circuit, high and low frequency adjust circuits, and supply-voltage filter circuits. The main amplifier and frequency adjust circuits are located on the "Mother Board", PC-294. The overload and filter circuits are located on the "Overload Board", PC-293.

5-2. MAIN AMPLIFIER (PC-294). The main amplifier is composed of two identical input amplifiers (identified as "A" and "B"), a differential amplifier stage ("C"), a buffer stage ("D"), two stages of X10 gain ("E" and "F") and an output buffer stage ("G") as shown in Figure 18.

a. Stage "A". This amplifier stage is composed of transistors Q203, Q204, Q206, Q208, Q210, Q213 and Q214. Gain is set by resistors R217 and R218 where:

$$\text{Gain}_A = \frac{R217 + R218}{R217} = 10.$$

Potentiometer R244 adjusts bias current through resistors R213 and R214.

b. Stage "B". This amplifier stage is composed of transistors Q201, Q202, Q205, Q207, Q209, Q211, and Q212. Gain is set by resistors R212 and R213 where:

$$\text{Gain}_B = \frac{R212 + R213}{R212} = 10.$$

Potentiometer R237 adjusts the bias current through R211 and R212.

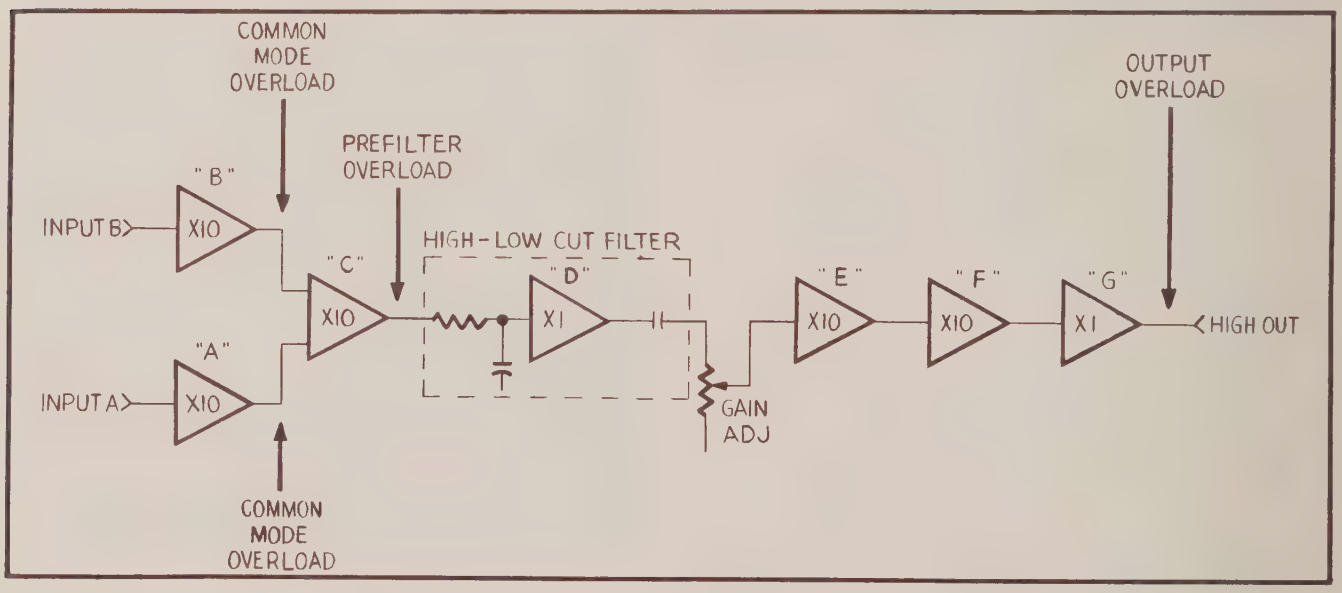

FIGURE 18. Overall Block Diagram.

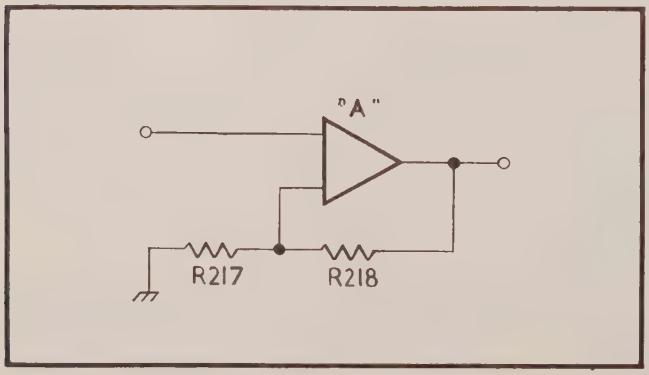

FIGURE 19. Non-inverting Stage "A".

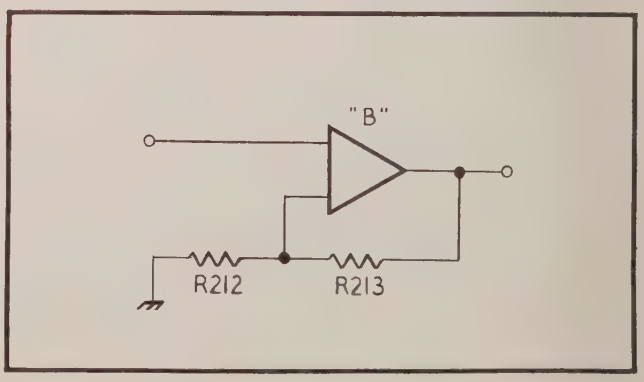

FIGURE 20. Non-inverting Stage "B".

c. Stage "C". This amplifier is composed of integrated circuit QA201A and various gain set resistors which are connected for either single-ended or differential mode.

1. Single-Ended Mode. For this mode amplifiers "A" and "B" are connected as summing inputs to amplifier "C" as shown in Figure 21. The gain of amplifier "C" is determined by resistors R247, R248, and R249 as follows:

$$\text{Gain}_C \text{ (with respect to "A")} = \frac{R248}{R249} = 5$$

$$\text{Gain}_C \text{ (with respect to "B")} = \frac{R248}{R247} = 5$$

$$\text{Total Gain}_C = 10.$$

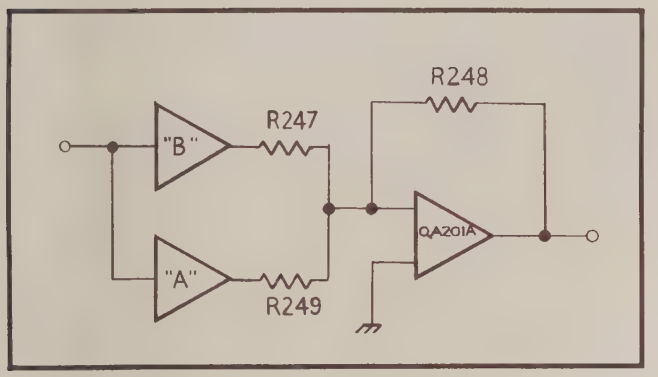

FIGURE 21. Single-ended Mode.

2. Differential Mode. For this mode, amplifiers "A" and "B" are connected to the non-inverting and inverting inputs respectively of amplifier "C" as shown in Figure 22. The gain of the non-inverting input is set by resistors R250, R252 , R253, R247, R248 and R249 as follows:

$$\text{Gain}_C \text{ (non-inverting)} = \left(\frac{R250 + R253}{R250 + R252 + R253}\right)\left(\frac{R247//R249 + R248}{R247//R249}\right) = 10.$$

The gain of the inverting input is set by resistors R247, R248 and R249.

$$\text{Gain}_C \text{ (inverting)} = \frac{R248}{R247 \;//\; R249} = 10.$$

Potentiometer R253 is the low frequency common mode rejection adjustment

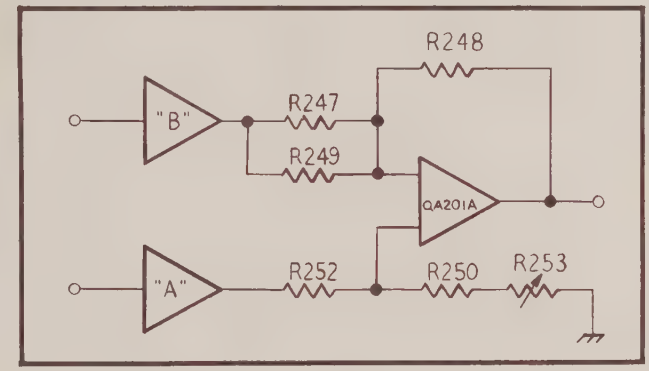

FIGURE 22. Differential Mode.

d. Stage "D". This amplifier stage is a unity-gain buffer amplifier composed of QA301. This amplifier is a self-contained voltage follower integrated circuit package.

e. Stage "E". This amplifier stage is composed of integrated circuit QA302A connected as a non-inverting amplifier as shown in Figure 23. Gain is set by resistors R308 and R313, where:

$$\text{Gain}_E = \frac{R308 + R313}{R308} = 10.$$

f. Stage "F". This amplifier stage is composed of integrated circuit QA302B connected as a non-inverting amplifier as shown in Figure 24. Gain is set by resistors R316 and R317, where:

$$\text{Gain}_F = \frac{R316 + R317}{R316} = 10.$$

g. Stage "G". This amplifier is a unity-gain buffer amplifier composed of QA303. This amplifier is a self-contained voltage follower integrated circuit package.

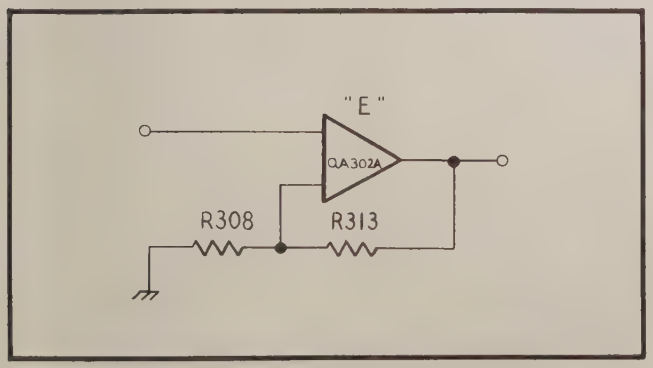

FIGURE 23. Non-inverting Stage "E".

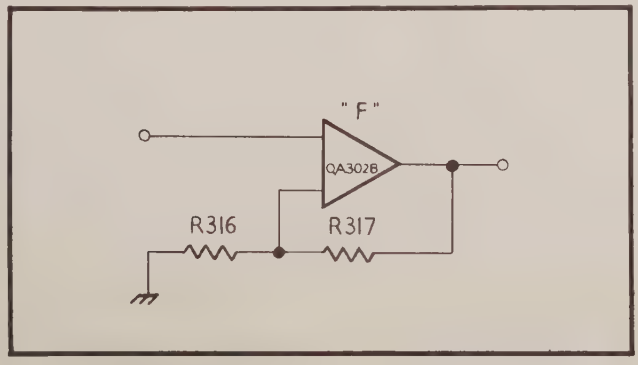

FIGURE 24. Non-inverting Stage "F".

5-3. FREQUENCY RESPONSE ADJUST CIRCUITRY. (PC-294). The Model 103A permits adjustment of overall frequency response through the adjustment of separate "HIGH CUT" and "LOW CUT" filter circuits.

a. HIGH CUT Filter. The high-cut filter circuit is adjustable by means of switch S301A. This switch has 10 positions designated 10 Hz to 300 kHz. Each position represents the "3 dB Down" point on the overall frequency response characteristic. The filter is essentially a low-pass filter as shown in Figure 25. The response of the filter is approximately given by the equation:

$$f_H\ (3\ dB) = \frac{1}{2\pi RC} = \frac{10}{C} \quad \text{where C = value in uF.}$$

b. LOW CUT Filter. The low-cut filter circuit is adjustable by means of switch S301B. This switch has nine positions designated 0.1 Hz to 10 kHz. Each position represents the "3 dB Down" point on the overall frequency response characteristic. The filter is essentially a high-pass filter as shown in Figure 25. The response of the filter is approximately given by the equation:

$$f_L\ (3\ dB) = \frac{1}{2\pi RC} = \frac{10}{C} \quad \text{where C = value in uF.}$$

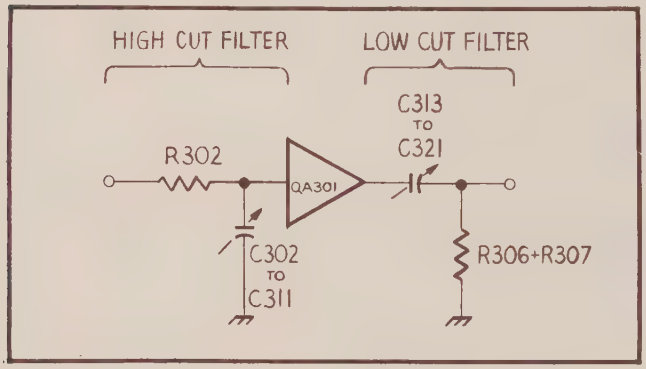

FIGURE 25. High-Low Cut Filter.

5-4. GAIN ADJUST CIRCUITRY. (PC-294). The Model 103A provides gain in calibrated steps of 100, (40 dB) 1k, (60 dB) and 10k (80 dB) by means of switch S302. Since amplifier stages "B" and "C" provide a fixed gain of X100 (single-ended mode) amplifier stages "E" and "F" must be switched in to the overall amplifier to provide gains of 1k and 10k. The gain can be adjusted by use of an attenuator control designated GAIN ADJ. (R306). This control provides over 20 dB of attenuation. (minimum gain is therefore just under 10)

5-5. DC BIAS ADJUSTMENT CIRCUIT. (PC-294). This circuit is used to adjust the output dc level. Two controls on the rear panel are identified as DC OUTPUT ADJ "1" and "2".

a. Adjustment "1" (R312). This control adjusts the d-c voltage offset of QA302A. Resistor R312 is connected to the non-inverting input of stage "E" as shown in Figure 26.

b. Adjustment "2" (R311). This control adjusts the d-c current offset of QA302A. Resistor R311 is connected to the inverting input of stage "E" as shown in Figure 26.

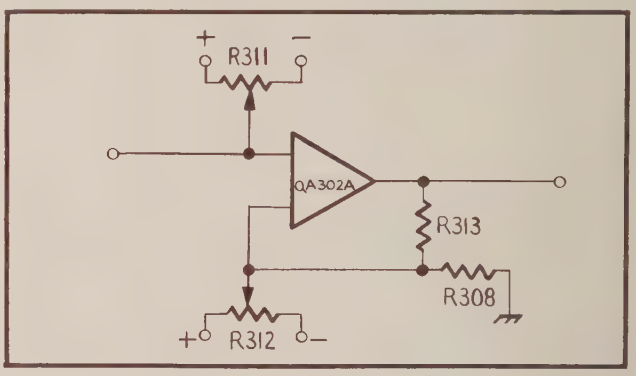

FIGURE 26. DC Offset Adjustment.

5-6. OVERLOAD CIRCUIT. (PC-293). This circuit senses an overload level at four points in the amplifier as shown in Figure 18. The sense amplifier detects a threshold level of +5 or -5 volts dc. A positive peak detector is composed of integrated circuit QA101A. A negative peak detector is composed of integrated circuit QA101E. The threshold voltage is set by voltage divider consisting of resistors R108 and R110. Transistor Q103 drives the overload lamp DS101 whenever an overload is sensed at any of the sense points.

5-7. ±15V FILTER CIRCUIT. (PC-293). This circuit is an electronic filter which provides up to 60 dB of rejection at 60 Hz. The ±15V derived is used to bias amplifier stages "A", "B", and "C". Transistors Q104 and Q105 form the "+" filter while Q106 and Q107 form the "-" filter.

5-8. ACCESSORY POWER SUPPLY. (MODEL 1031A). The accessory power supply provides regulated ±18 volts dc at up to 150 mA (sufficient to power up to 3 Model 103A Amplifiers simultaneously). The Model 1031A is composed of a "Mother Board", PC-295 and a "Regulator Board", PC-261.

a. Mother Board. Power for the ±18V supplies is provided by separate transformer windings and bridge rectifiers as shown on schematic 24808D.

b. Regulator Board. The ±18V regulators are composed of identical components. The regulators are connected as shown in Figure 27.

1. +18V Regulator. Transistor Q101 is the series pass regulator. Integrated circuit QA101 is a self-contained reference and regulating circuit. Potentiometer R104 is an adjustment control. Resistor R102 serves as a current limit device.

2. -18V Regulator. Transistor Q102 is the series pass regulator. Integrated circuit QA102 is a self-contained reference and regulating circuit. Potentiometer R109 is an adjustment control. Resistor R107 serves as a current limit device.

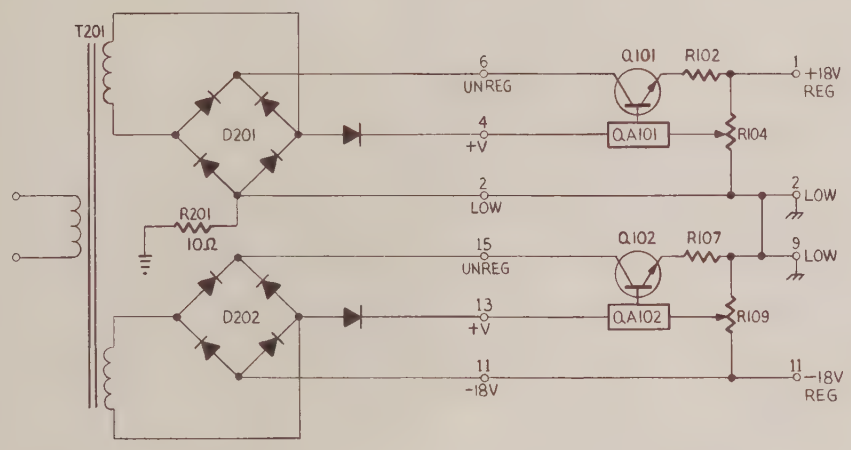

FIGURE 27. ± 18v Power Supply.

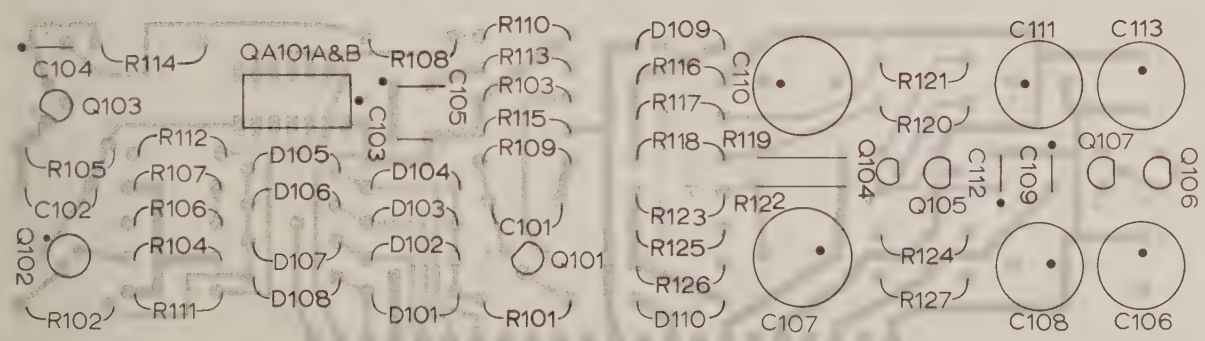

FIGURE 28. Component Layout, PC-293.

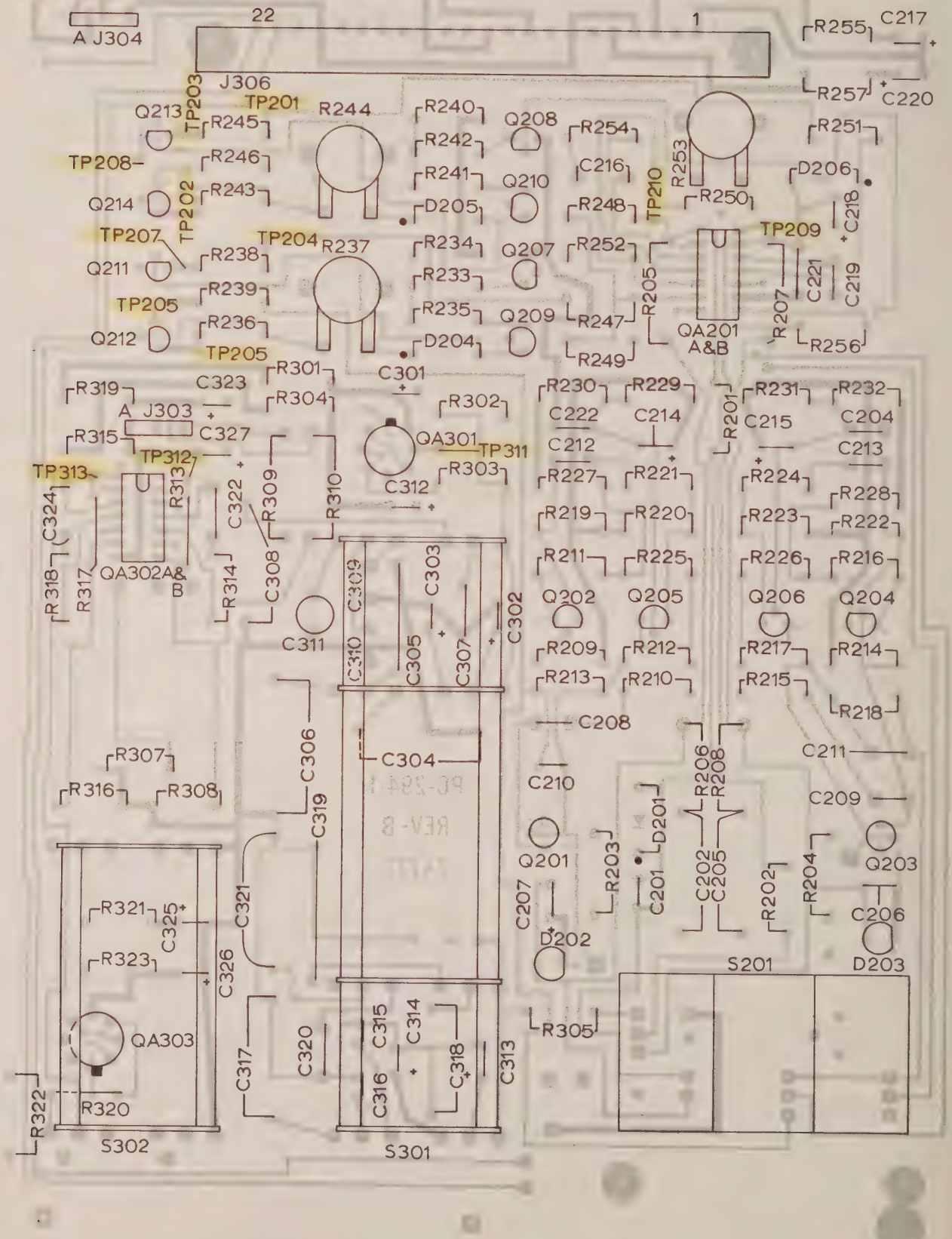

FIGURE 29. Component Layout, PC-294 (Mother Board)

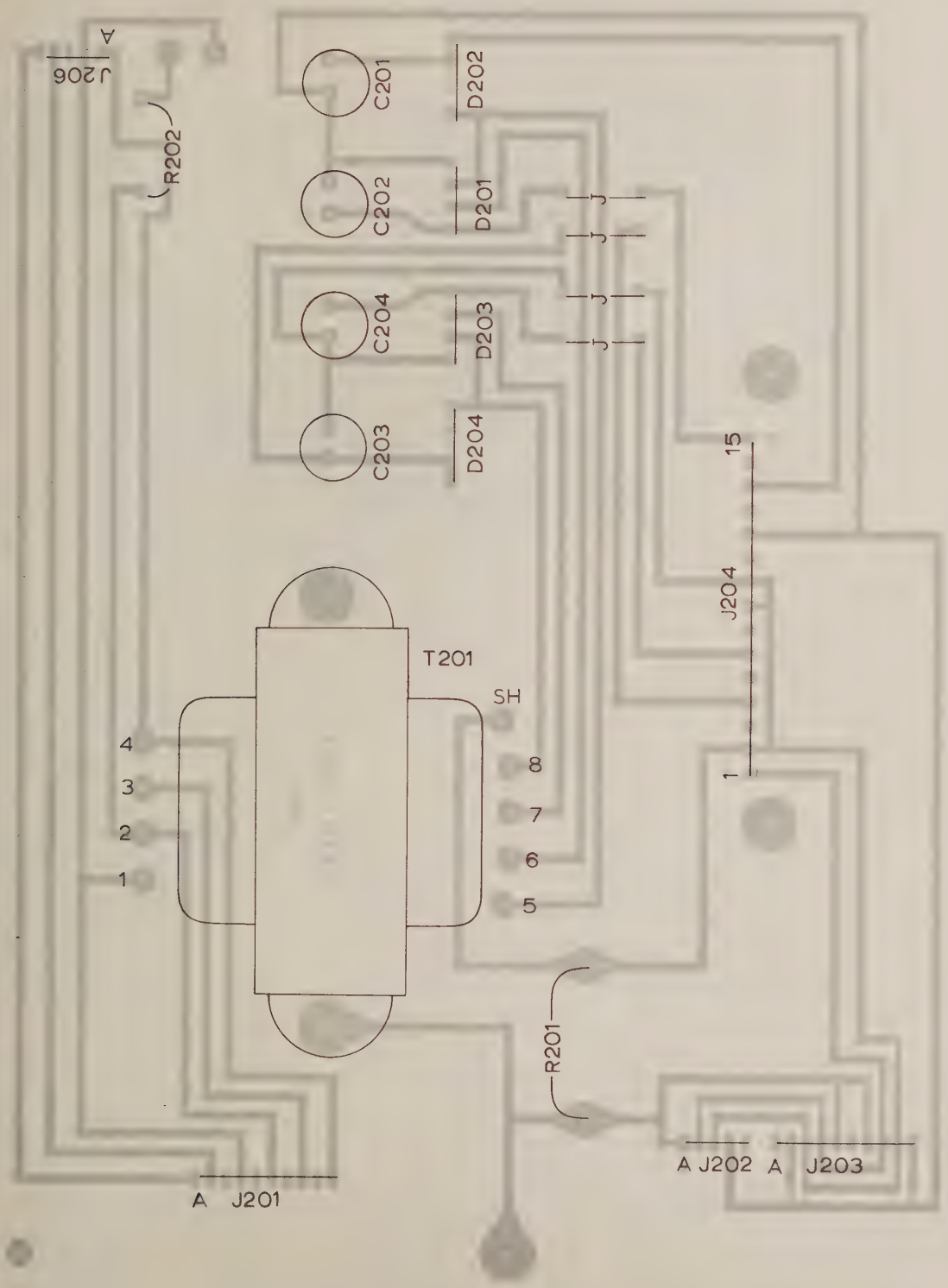

FIGURE 30. Component Layout, PC-295 (Model 1031A Power Supply)

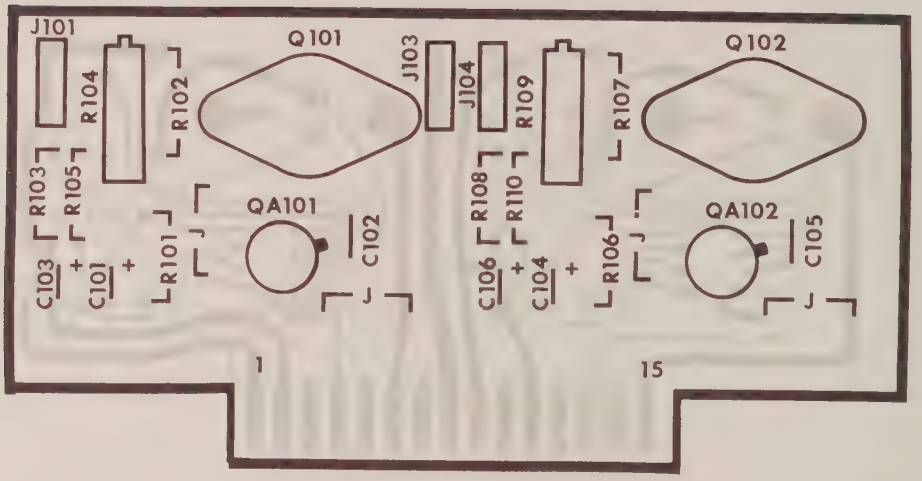

FIGURE 31. Component Layout, PC-261 (Model 1031A Regulator)

SECTION 6. REPLACEABLE PARTS

6-1. REPLACEABLE PARTS LIST: This section contains a list of components used in this instrument for user reference. The Replaceable Parts List describes the individual parts giving Circuit Designation, Description, Suggested Manufacturer (Code Number), Manufacturer's Part Number, and the Keithley Part Number. Also included is a Figure Reference Number where applicable. The complete name and address of each Manufacturer is listed in the CODE-TO-NAME Listing following the parts list.

TABLE 6-1.
Abbreviations and Symbols

A	ampere	F	farad	μ	ohm
		Fig	Figure		
CbVar	Carbon Variable			p	pico (10^{-12})
CerD	Ceramic Disc	GCb	Glass enclosed Carbon	PC	Printed Circuit
Cer Trimmer	Ceramic Trimmer			Poly	Polystyrene
Comp	Composition	k	kilo (10^{-3})		
				Ref.	Reference
DCb	Deposited Carbon	μ	micro (10^{-6})		
Desig.	Designation			TCu	Tinner Copperweld
		M	Meg (10^{6})		
EAL	Electrolytic, Aluminum	Mfr.	Manufacturer	V	volt
ETB	Electrolytic, tubular	MtF	Metal Film		
ETT	Electrolytic, tantalum	My	Mylar	W	watt
				WW	Wirewound
		No.	Number	WWVar	Wirewound Variable

6-2. ELECTRICAL SCHEMATICS AND DIAGRAMS. Schematics and diagrams are included to describe the electrical circuits as discussed in Section 5. Table 6-2 identifies all schematic part numbers included.

6-3. HOW TO USE THE REPLACEABLE PARTS LIST. This Parts List is arranged such that the individual types of components are listed in alphabetical order. Main Chassis parts are listed followed by printed circuit boards and other subassemblies.

6-4. HOW TO ORDER PARTS.

a. Replaceable parts may be ordered through the Sales Service Department, Keithley Instruments, Inc. or your nearest Keithley representative.

b. When ordering parts, include the following information.

1. Instrument Model Number.
2. Instrument Serial Number.
3. Part Description.
4. Schematic Circuit Designation.
5. Keithley Part Number.

c. All parts listed are maintained in Keithley Spare Parts Stock. Any part not listed can be made available upon request. Parts identified by the Keithley Manufacturing Code Number 80164 should be ordered directly from Keithley Instruments, Inc.

TABLE 6-2.
Electrical Schematics and Diagrams

Description	Circuit Designation	Schematic
Mother Board, Part 1	PC-294	24773D
Mother Board, Part 2	PC-294	24780D
Filter & Overload	PC-293	24771D
Regulator (1031A)	PC-261	24813D
Power Supply (1031A)	PC-295	24784D

TABLE 6-3.
PC Board Designation Series

Series	Description	Designation	Page No.
100	Overload & Filter	PC-293	26
200	Input Amplifier	PC-294	27
300	Output Amplifier	PC-294	30
100	Regulator(1031A)	PC-261	31
200	Power Supply	PC-295	32

TABLE 6-4.
Mechanical Parts List
Model 103A Nanovolt Amplifier.

Item No.	Description	Qty. Per Assembly	Keithley Part No.	Figure No.
-	Chassis Assembly	-	-	33
-	Front Panel Assembly	-	-	
1	Front Panel	1	24835B	
2	Screw, Slotted, 6-32 x 3/8	4	-	
3	Front Panel Overlay	1	24729B	
4	Rear Panel	1	24740B	
5	Side Extrusion Left	1	24754C	
6	Side Extrusion Right	1	24754C	
7	Corner Bracket	2	24745B	
8	Screw, Socket, 6-32 x 1/2	4	-	
9	Screw, Phillips, 6-32 x 3/8	4	-	
10	Clip for Side Dress	2	FA-101	
11	Side Dress Panel	2	24755B	
-	Top Cover Assembly	-	-	
12	Top Cover	1	24732C	
13	Screw, Socket, 6-32 x 5/16	4	-	
-	Bottom Cover Assembly	-	24763B	34
14	Bottom Cover	1	24733C	
15	Screw, Socket, 6-32 x 5/16	4	-	
-	Feet Assembly	-	-	
16	Feet	4	24322B	
17	Ball	4	FE-6	
18	Tilt Bail	1	17147B	
19	Screw, Phillips, 6-32	4	-	
20	Kep Nut, 6-32	4	-	

TABLE 6-5.
Mechanical Parts List
Model 1031A Power Supply.

Item No.	Description	Qty. Per Assembly	Keithley Part No.	Figure No.
-	Chassis Assembly	-	-	33
-	Front Panel Assembly	-	-	
1	Front Panel	1	24802B	
2	Screw, Slotted, 6-32 x 3/8	4	-	
3	Front Panel Overlay	1	24801B	
4	Rear Panel	1	24804C	
5	Side Extrusion Left	1	24836B	
6	Side Extrusion Right	1	24837B	
7	Corner Bracket	2	24745B	
8	Screw, Socket, 6-32 x 1/2	4	-	
9	Screw, Phillips, 6-32 x 3/8	4	-	
10	Clip for Side Dress	2	FA-101	
11	Side Dress Panel	2	24755B	
-	Top Cover Assembly	-	-	
12	Top Cover	1	24827B	
13	Screw, Socket, 6-32 x 5/16	4	-	
-	Bottom Cover Assembly	-	24763B	34
14	Bottom Cover	1	24733C	
15	Screw, Socket, 6-32 x 5/16	4	-	
-	Feet Assembly	-	-	
16	Feet	4	24322B	
17	Ball	4	FE-6	
18	Tilt Bail	1	17147B	
19	Screw, Phillips, 6-32	4	-	
20	Kep Nut, 6-32	4	-	

FIGURE 33. Chassis Assembly - Exploded View.

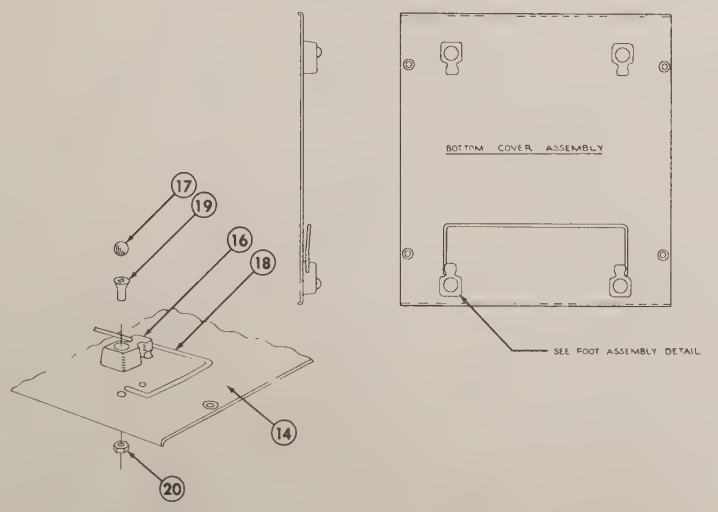

FIGURE 34. Bottom Cover Assembly.

OVERLOAD & FILTER CIRCUIT, "100" SERIES. PC-293

CAPACITORS

Circuit Desig.	Value	Rating	Type	Mfr. Code	Mfr. Part No.	Keithley Part No.	Fig. Ref.
C101	.1 µF	250 V	MtF	73445	C280AE	C178-.1M	28
C102	.1 µF	250 V	MtF	73445	C280AE	C178-.1M	28
C103	10 µF	20 V	ETT	17554	TSD1-20	C179-10M	28
C104	10 µF	20 V	ETT	17554	TSD1-20	C179-10M	28
C105	10 µF	20 V	ETT	17554	TSD1-20	C179-10M	28
C106	100 µF	25 V	EAL	29309	JC8100258P	C211-100M	28
C107	500 µF	25 V	EAL	29309	JC12500258P	C211-500M	28
C108	100 µF	25 V	EAL	29309	JC8100258P	C211-100M	28
C109	10 µF	20 V	ETT	17554	TSD1-20	C179-10M	28
C110	500 µF	25 V	EAL	29309	JC12500258P	C211-500M	28
C111	100 µF	25 V	EAL	29309	JC8100258P	C211-100M	28
C112	10 µF	20 V	ETT	17554	TSD1-20	C179-10M	28
C113	100 µF	25 V	EAL	29309	JC8100258P	C211-100M	28

DIODES

Circuit Desig.	Type	Mfr. Code	Mfr. Part No.	Keithley Part No.	Fig. Ref.
D101	Silicon	01295	1N914	RF-28	28
D102	Silicon	01295	1N914	RF-28	28
D103	Silicon	01295	1N914	RF-28	28
D104	Silicon	01295	1N914	RF-28	28
D105	Silicon	01295	1N914	RF-28	28
D106	Silicon	01295	1N914	RF-28	28
D107	Silicon	01295	1N914	RF-28	28
D108	Silicon	01295	1N914	RF-28	28
D109	Silicon	01295	1N645	RF-14	28
D110	Silicon	01295	1N645	RF-14	28

MISCELLANEOUS

Circuit Desig.	Type	Mfr. Code	Mfr. Part No.	Keithley Part No.	Fig. Ref.
			(U6A7749393)		
QA101	Operational Amplifier (Dual)	07263	A749C	IC-27	28
DS101	Pilot Lamp, Amber	07294	CF03ACS1869	PL-51	28

RESISTORS

Circuit Desig.	Value	Rating	Type	Mfr. Code	Mfr. Part No.	Keithley Part No.	Fig. Ref.
R101	10 kΩ	10%, 1/4 W	Comp	44655	RC07	R76-10K	28
R102	10 kΩ	10%, 1/4 W	Comp	44655	RC07	R76-10K	28
R103	1 kΩ	10%, 1/4 W	Comp	44655	RC07	R76-1K	28
R104	1 kΩ	10%, 1/4 W	Comp	44655	RC07	R76-1K	28
R105	49.9 kΩ	1%, 1/8 W	MtF	07716	CEA	R88-49.9K	28
R106	4.99 kΩ	1%, 1/8 W	MtF	07716	CEA	R88-4.99K	28
R107	12.1 kΩ	1%, 1/8 W	MtF	07716	CEA	R88-12.1K	28
R108	4.99 kΩ	1%, 1/8 W	MtF	07716	CEA	R88-4.99K	28
R109	49.9 kΩ	1%, 1/8 W	MtF	07716	CEA	R88-49.9K	28
R110	12.1 kΩ	1%, 1/8 W	MtF	07716	CEA	R88-12.1K	28

RESISTORS (cont'd)

Circuit Desig.	Value	Rating	Type	Mfr. Code	Mfr. Part No.	Keithley Part No.	Fig. Ref.
R111	10 kΩ	10%, 1/4 W	Comp	44655	RC07	R76-10K	28
R112	10 kΩ	10%, 1/4 W	Comp	44655	RC07	R76-10K	28
R113	10 kΩ	10%, 1/4 W	Comp	44655	RC07	R76-10	28
R114	560 Ω	10%, 1/2 W	Comp	01121	EB	R1-560	28
R115	10 Ω	10%, 1/4 W	Comp	44655	RC07	R76-10	28
R116	100 Ω	10%, 1/4 W	Comp	44655	RC07	R76-100	28
R117	1 kΩ	10%, 1/4 W	Comp	44655	RC07	R76-1K	28
R118	10 kΩ	1%, 1/8 W	MtF	07716	CEA	R88-10K	28
R119	100 kΩ	1%, 1/8 W	MtF	07716	CEA	R88-100K	28
R120	1 kΩ	10%, 1/4 W	Comp	44655	RC07	R76-1K	28
R121	1 kΩ	10%, 1/4 W	Comp	44655	RC07	R76-1K	28
R122	100 kΩ	1%, 1/8 W	MtF	07716	CEA	R88-100K	28
R123	10 kΩ	1%, 1/8 W	MtF	07716	CEA	R88-10K	28
R124	1 kΩ	10%, 1/4 W	Comp	44655	RC07	R76-1K	28
R125	1 kΩ	10%, 1/4 W	Comp	44655	RC07	R76-1K	28
R126	100 Ω	10%, 1/4 W	Comp	44655	RC07	R76-100	28
R127	1 kΩ	10%, 1/4 W	Comp	44655	RC07	R76-1K	28

TRANSISTORS

Circuit Desig.	Type	Mfr. Code	Mfr. Part No.	Keithley Part No.	Fig. Ref.
Q101	Silicon	07263	2N3565	TG-39	28
Q102	Silicon	07263	S17638	TG-33	28
Q103	Silicon	07263	2N3565	TG-39	28
Q104	Silicon	04713	2N5089	TG-62	28
Q105	Silicon	04713	2N3904	TG-47	28
Q106	Silicon, PNP	04713	2N3906	TG-84	28
Q107	Silicon, PNP	04713	2N3906	TG-84	28

INPUT AMPLIFIER CIRCUIT, "200" SERIES PC-294

CAPACITORS

Circuit Desig.	Value	Rating	Type	Mfr. Code	Mfr. Part No.	Keithley Part No.	Fig. Ref.
C201	10 μF	20 V	ETT	17554	TSD1-20	C179-10M	29
C202	0.1 μF	200 V	My	13050	SM1A	C47-.1M	29
C203	Not Used						
C204	.0047 μF	600 V	CerD	72982	ED	C22-.0047M	29
C205	0.1 μF	200 V	My	13050	SM1A	C47-.1M	29
C206	100 μF	15V, 10%	ETT	06751	TSD515107A	C205-100M	29
C207	100 μF	15V, 10%	ETT	06751	TSD515107A	C205-100M	29
C208	470 pF	1000 V	CerD	56289	DD-471-10%	C64-470P	29
C209	470 pF	1000 V	CerD	56289	DD-471-10%	C64-470P	29
C210	.001 μF	1000 V	CerD	72982	801000X5F0	C64-.001M	29
C211	7-25 pF	300 V	Var	72982	538-037	C175-7/25P	29
C212	.0022 μF	1000 V	CerD	72982	811000X5F0222K	C22-.0022M	29
C213	.0022 μF	1000 V	CerD	72982	811000X5F0222K	C22-.0022M	29
C214	100 μF	15V, 10%	ETT	06751	TSD515107A	C205-100M	29
C215	100 μF	10V, 10%	ETT	06751	TSD515107A	C205-100M	29

CAPACITORS (cont'd)

Circuit Desig.	Value	Rating	Type	Mfr. Code	Mfr. Part No.	Keithley Part No.	Fig. Ref.
C216	.01 µF	600 V	CerD	72982	ED	C22-.01M	29
C217	10 µF	20 V	ETT	17554	TSD1-20	C179-10M	29
C218	10 µF	20 V	ETT	17554	TSD1-20	C179-10M	29
C219	.0047 µF	600 V	CerD	72982	ED	C22-.0047M	29
C220	10 µF	20 V	ETT	17554	TSD1-20	C179-10M	29
C221	.02 µF	600 V	CerD	72982	ED	C22-.02M	29
C222	.0047 µF	600 V	CerD	72982	ED	C22-.0047M	29

DIODES

Circuit Desig.	Type	Mfr. Code	Mfr. Part No.	Keithley Part No.	Fig. Ref.
D201	Silicon	01295	1N914	RF-28	29
D202	Silicon	07263	2N3565	TG-39	29
D203	Silicon	07263	2N3565	TG-39	29
D204	Silicon	01295	1N645	RF-14	29
D205	Silicon	01295	1N645	RF-14	29
D206	Silicon	01295	1N914	RF-28	29

MISCELLANEOUS

Circuit Desig.	Type	Mfr. Code	Mfr. Part No.	Keithley Part No.	Fig. Ref.
J201	Receptacle, BNC (UG-1094A/U)	02660	31-2221	CS-249	29
J202	Receptacle, BNC (UG-1094A/U)	02660	31-2221	CS-249	29
S201	Switch, Push Button "INPUT & RESET"	80164	SW-343	SW-343	29
QA201	Integrated Circuit, (Dual)	07263	U6E7739393	IC-28	29

RESISTORS

Circuit Desig.	Value	Rating	Type	Mfr. Code	Mfr. Part No.	Keithley Part No.	Fig. Ref.
R201	15 kΩ	1%, 1/8 W	MtF	07716	CEA	R88-15K	29
R202	15 kΩ	1%, 1/8 W	MtF	07716	CEA	R88-15K	29
R203	100 kΩ	1%, 1/8 W	MtF	07716	CEA	R88-100K	29
R204	100 kΩ	1%, 1/8 W	MtF	07716	CEA	R88-100K	29
R205	10 MΩ	1%, 1/2 W	DCb	91637	DCF-1/2	R12-10M	29
R206	10^9 Ω	20%, 1/2 W	Comp	75042	GBT	R37-10^9	29
R207	1.5 MΩ	1%, 1/2 W	MtF	07716	CEC	R94-1.5M	29
R208	10^9 Ω	20%, 1/2 W	Comp	75042	GBT	R37-10^9	29
R209	10 kΩ	1%, 1/8 W	MtF	07716	CEA	R88-10K	29
R210	1 kΩ	1%, 1/8 W	MtF	07716	CEA	R88-1K	29
R211	301 Ω	1%, 1/8 W	MtF	07716	CEA	R88-301	29
R212	200 Ω	0.1%, 1/8 W	MtF	91637	MMF-1/8	R179-200	29
R213	1.8 kΩ	0.1%, 1/8 W	MtF	91637	MMF-1/8	R179-1.8K	29
R214	10 kΩ	1%, 1/8 W	MtF	07716	CEA	R88-10K	29
R215	1 kΩ	1%, 1/8 W	MtF	07716	CEA	R88-1K	29
R216	301 Ω	1%, 1/8 W	MtF	07716	CEA	R88-301	29
R217	200 Ω	0.1%, 1/8 W	MtF	91637	MMF-1/8	R179-200	29
R218	1.8 kΩ	0.1%, 1/8 W	MtF	91637	MMF-1/8	R179-1.8K	29
R219	30.1 kΩ	1%, 1/8 W	MtF	07716	CEA	R88-30.1K	29
R220	30.1 kΩ	1%, 1/8 W	MtF	07716	CEA	R88-30.1K	29

RESISTORS (cont'd)

Circuit Desig.	Value	Rating	Type	Mfr. Code	Mfr. Part No.	Keithley Part No.	Fig. Ref.
R221	2.21 kΩ	1%, 1/8 W	MtF	07716	CEA	R88-2.21K	29
R222	30.1 kΩ	1%, 1/8 W	MtF	07716	CEA	R88-30.1K	29
R223	30.1 kΩ	1%, 1/8 W	MtF	07716	CEA	R88-30.1K	29
R224	2.21 kΩ	1%, 1/8 W	MtF	07716	CEA	R88-2.21K	29
R225	301 Ω	1%, 1/8 W	MtF	07716	CEA	R88-301	29
R226	301 Ω	1%, 1/8 W	MtF	07716	CEA	R88-301	29
R227	90.9 kΩ	1%, 1/8 W	MtF	07716	CEA	R88-90.9K	29
R228	90.9 kΩ	1%, 1/8 W	MtF	07716	CEA	R88-90.9K	29
R229	10 kΩ	1%, 1/8 W	MtF	07716	CEA	R88-10K	29
R230	20 kΩ	1%, 1/8 W	MtF	07716	CEA	R88-20K	29
R231	10 kΩ	1%, 1/8 W	MtF	07716	CEA	R88-10K	29
R232	20 kΩ	1%, 1/8 W	MtF	07716	CEA	R88-10K	29
R233	174 kΩ	1%, 1/8 W	MtF	07716	CEA	R88-174K	29
R234	2 kΩ	1%, 1/8 W	MtF	07716	CEA	R88-2K	29
R235	174 Ω	1%, 1/8 W	MtF	07716	CEA	R88-174	29
R236	30.1 kΩ	1%, 1/8 W	MtF	07716	CEA	R88-30.1K	29
R237	2 kΩ	1/4 W	CbVar	37942	MTC-L4	RP67-2K	29
R238	49.9 Ω	1%, 1/8 W	MtF	07716	CEA	R88-49.9	29
R239	49.9 Ω	1%, 1/8 W	MtF	07716	CEA	R88-49.9	29
R240	2 kΩ	1%, 1/8 W	MtF	07716	CEA	R88-2K	29
R241	174 Ω	1%, 1/8 W	MtF	07716	CEA	R88-174	29
R242	174 Ω	1%, 1/8 W	MtF	07716	CEA	R88-174	29
R243	30.1 kΩ	1%, 1/8 W	MtF	07716	CEA	R88-30.1K	29
R244	2 kΩ	1/4 W	CbVar	37942	MTC-L4	RP67-2K	29
R245	49.9 Ω	1%, 1/8 W	MtF	07716	CEA	R88-49.9	29
R246	49.9 Ω	1%, 1/8 W	MtF	07716	CEA	R88-49.9	29
R247	2 kΩ	0.1%, 1/8 W	MtF	91637	MFF-1/8	R179-2K	29
R248	10 kΩ	0.1%, 1/8 W	MtF	91637	MFF-1/8	R179-10K	29
R249	2 kΩ	0.1%, 1/8 W	MtF	91637	MFF-1/8	R179-2K	29
R250	9.76 kΩ	1%, 1/8 W	MtF	07716	CEA	R88-9.76K	29
R251	10 kΩ	1%, 1/8 W	MtF	07716	CEA	R88-10K	29
R252	1 kΩ	0.1%, 1/8 W	MtF	91637	MFF-1/8	R179-1K	29
R253	500 Ω	1/4 W	CbVar	37942	MTC-L4	RP67-500	29
R254	33 Ω	10%, 1/4 W	Comp	44655	RC07	R76-33	29
R255	10 Ω	10%, 1/4 W	Comp	44655	RC07	R76-33	29
R256	10 kΩ	10%, 1/8 W	MtF	07716	CEA	R88-10K	29
R257	10 Ω	10%, 1/4 W	Comp	44655	RC07	R76-10	29

TRANSISTORS

Circuit Desig.	Type	Mfr. Code	Mfr. Part No.	Keithley Part No.	Fig. Ref.
Q201	-	17856	2N4869A	TG-83	29
Q202	Silicon	04713	2N5089	TG-62	29
Q203	-	17856	2N4869A	TG-83	29
Q204	Silicon	04713	2N5089	TG-62	29
Q205	Silicon	04713	2N5089	TG-62	29
Q206	Silicon	04713	2N5089	TG-62	29
Q207	-	04713	2N3905	TG-53	29
Q208	-	04713	2N3905	TG-53	29
Q209	-	04713	2N3905	TG-53	29
Q210	-	04713	2N3905	TG-53	29
Q211	-	04713	2N3903	TG-49	29
Q212	-	04713	2N3905	TG-53	29
Q213	-	04713	2N3903	TG-49	29
Q214	-	04713	2N3905	TG-53	29

OUTPUT AMPLIFIER, "300" SERIES PC-294

CAPACITORS

Circuit Desig.	Value	Rating	Type	Mfr. Code	Mfr. Part No.	Keithley Part No.	Fig. Ref.
C301	10 µF	20 V	ETT	17554	TSD1-20	C179-10M	29
C302	1 µF	20 V	ETT	17554	TSD1-20	C204-1M	29
C303	.33 µF	20 V	ETT	17554	TSD1-20	C204-.33M	29
C304	.1 µF	V					
C305	.033 µF	100 V	My	88480	3FR3331E	C146-.033M	29
C306	.01 µF	200 V	Poly	84171	2PJ	C108-.01M	29
C307	.0033 µF	1000 V	CerD	14659	10SS-D33	C64-.0033M	29
C308	.001 µF	200 V	Poly	84171	2PJ	C108-.001M	29
C309	330 µF	1000 V	CerD	72982	831000X5F	C64-330P	29
C310	82 pF	1000 V	CerD	72982	831000X5F	C64-330P	29
C311	7-25 pF	300 V	Var	72982	538-037	C175-7/25P	29
C312	10 µF	20 V	ETT	17554	TSD1-20	C179-10M	29
C313	100 µF	15 V	ETT	06751	TSD515	C205-100M	29
C314	10 µF	20 V	ETT	17554	TSD1-20	C204-10M	29
C315	1 µF	20 V	ETT	17554	TSD1-20	C204-1M	29
C316	.33 µF	20 V	ETT	17554	TSD1-20	C204-.33M	29
C317	.1 µF						
C318	.033 µF	100 V	My	88480	3FR3331E	C146-.033M	29
C319	.01 µF	200 V	Poly	84171	2PJ	C108-.01M	29
C320	.0033 µF	1000 V	CerD	14659	10SS-D33	C64-.0033M	29
C321	.001 µF	200 V	Poly	84171	2PJ	C108-.001M	29
C322	.01	600 V	CerD	72982	ED	C22-.01	29
C323	10 µF	20 V	ETT	17554	TSD1-20	C179-10M	29
C324	.01 µF	600 V	CerD	72982	ED	C22-.01	29
C325	10 µF	20 V	ETT	17554	TSD1-20	C179-10M	29
C326	10 µF	20 V	ETT	17554	TSD1-20	C179-10M	29
C327	10 µF	20 V	ETT	17554	TSD1-20	C179-10M	29

INTEGRATED CIRCUITS

ECG 725

Circuit Desig.	Type	Mfr. Code	Mfr. Part No.	Keithley Part No.	Fig. Ref.
QA301	Operational Amplifier	12040	LM310H	IC-18	29
QA302	Integrated Circuit, (Dual)	07263	U6E7739393	IC-28	29
QA303	Operational Amplifier	12040	LM310H	IC-18	29

MISCELLANEOUS

Circuit Desig.	Type	Mfr. Code	Mfr. Part No.	Keithley Part No.	Fig. Ref.
J301	Receptacle, BNC	95712	6672NT34	CS-15	-
J302	Receptacle, BNC	95712	6672NT34	CS-15	-
J303	Connector, Housing	22526	20370	CS-251	-
J304	Connector, Housing	22526	20370	CS-251	-
P301	Receptacle, Male, 4 Pins	02660	126-1427	CS-162	-
S301	Switch, Rotary, "LO/HI CUT"	80164	SW-342	SW-342	-
S302	Switch, Rotary, "GAIN"	80164	SW-341	SW-341	-
D301	Diode	01295	1N914	RF-28	-
J305	Not Used				
J306	Receptacle, 22 Pins	-9922	PSC4SS2212	CS-182	-

RESISTORS

Circuit Desig.	Value	Rating	Type	Mfr. Code	Mfr. Part No.	Keithley Part No.	Fig. Ref.
R301	10 Ω	10%, 1/4 W	Comp	44655	RC07	R76-10	29
R302	15.8 kΩ	1%, 1/8 W	MtF	07716	CEA	R88-15.8K	29
R303	2 kΩ						
R304	10 Ω	10%, 1/4 W	Comp	44655	RC07	R76-10	29
R305	1.5 kΩ	10%, 1/4 W	Comp	44655	RC07	R76-1.5K	29
R306	15 kΩ	10%	Var	71450	X3P1028	RP93-15K	29
R307	1 kΩ	0.1%, 1/8 W	MtF	91637	MMF-1/8	R179-1K	29
R308	1 kΩ	1%, 1/8 W	MtF	07716	CEA	R88-1K	29
R309	10 MΩ	1%, 1/2 W	DCb	91637	DCF-1/2	R12-10M	29
R310	10 MΩ	1%, 1/2 W	DCb	91637	DCF-1/2	R12-10M	29
R311	50 kΩ	20%, 2 W	Cermet	71450	550	RP74-50K	29
R312	50 kΩ	20%, 2 W	Cermet	71450	550	RP74-50K	29
R313	9 kΩ	0.1%, 1/8 W	MtF	91637	MMF-1/8	R179-9K	29
R314	33 Ω	10%, 1/4 W	Comp	44655	RC07	R76-33	29
R315	10 Ω	10%, 1/4 W	Comp	44655	RC07	R76-10	29
R316	1 kΩ	0.1%, 1/8 W	MtF	91637	MMF-1/8	R179-1K	29
R317	9 kΩ	0.1%, 1/8 W	MtF	91637	MMF-1/8	R179-9K	29
R318	33 Ω	10%, 1/4 W	Comp	44655	RC07	R76-33	29
R319	10 Ω	10%, 1/4 W	Comp	44655	RC07	R76-10	29
R320	2 kΩ	1%, 1/8 W	MtF	07716	CEA	R88-2K	29
R321	10 Ω	10%, 1/4 W	Comp	44655	RC07	R76-10	29
R322	1 kΩ	10%, 1/2 W	Comp	01121	EB	R1-1K	29
R323	10 Ω	10%, 1/4 W	Comp	44655	RC07	R76-10	29

MODEL 1031A POWER SUPPLY

REGULATOR BOARD, "100" SERIES, PC-261

CAPACITORS

Circuit Desig.	Value	Rating	Type	Mfr. Code	Mfr. Part No.	Keithley Part No.	Fig. Ref.
C101	10 μF	20 V	ETT	17554	TSD1-20	C179-10M	31
C102	470 pF	1000 V	CerD	72982	801000X5FO	C64-470P	31
C103	10 μF	20 V	ETT	17554	TSD1-20	C179-10M	31
C104	10 μF	20 V	ETT	17554	TSD1-20	C179-10M	31
C105	470 pF	1000 V	CerD	72982	801000X5FO	C64-470P	31
C106	10 μF	20 V	ETT	17554	TSD1-20	C179-10M	31

MISCELLANEOUS

Circuit Desig.	Type	Mfr. Code	Mfr. Part No.	Keithley Part No.	Fig. Ref.
Q101	Transistor	02735	40312	TG-54	31
Q102	Transistor	02735	40312	TG-54	31
QA101	Integrated Circuit	07263	U5R772339	IC-14	31
QA101	Integrated Circuit	07263	U5R772339	IC-14	31
J101	Not Used				
J102	Test Jack	83330	430	TJ-7	31
J103	Test Jack	83330	430	TJ-7	31
J104	Test Jack	83330	430	TJ-7	31

RESISTORS

Circuit Desig.	Value	Rating	Type	Mfr. Code	Mfr. Part No.	Keithley Part No.	Fig. Ref.
R101	845 Ω	1%, 1/8 W	MtF	07716	CEA	R88-845	31
R102	3.0 Ω	5%, 1/2 W	Comp	01121	EB	R19-3	31
R103	2 kΩ	1%, 1/8 W	MtF	07716	CEA	R88-2K	31
R104	200 Ω	.75W	Comp	80294	3009P	RP89-200	31
R105	1.3 kΩ	1%, 1/8 W	MtF	07716	CEA	R88-1.3K	31
R106	845 Ω	1%, 1/8 W	MtF	07716	CEA	R88-845	31
R107	3.0 Ω	5%, 1/2 W	Comp	01121	EB	R19-3	31
R108	2 kΩ	1%, 1/8 W	MtF	07716	CEA	R88-2K	31
R109	200 Ω	.75W	Comp	80294	3009P	RP89-200	31
R110	1.3 kΩ	1%, 1/8 W	MtF	07716	CEA	R88-1.3K	31

MODEL 1031A POWER SUPPLY

MOTHER BOARD, "200" SERIES, PC-295.

CAPACITORS

Circuit Desig.	Value	Rating	Type	Mfr. Code	Mfr. Part No.	Keithley Part No.	Fig. Ref.
C201	200 μF	35 V	EAL	90201	MTV200N35	C177-200M	30
C202	200 μF	35 V	EAL	90201	MTV200N35	C177-200M	30
C203	200 μF	35 V	EAL	90201	MTV200N35	C177-200M	30
C204	200 μF	35 V	EAL	90201	MTV200N35	C177-200M	30

DIODES

Circuit Desig.	Type	Mfr. Code	Mfr. Part No.	Keithley Part No.	Fig. Ref.
D201	Full-wave Bridge	83701	PD-10	RF-36	30
D202	Silicon	01295	1N645	RF-14	30
D203	Full-wave Bridge	83701	PD-10	RF-36	30
D204	Silicon	01295	1N645	RF-14	30

MISCELLANEOUS

Circuit Desig.	Type	Mfr. Code	Mfr. Part No.	Keithley Part No.	Fig. Ref.
R201	Resistor, 10Ω, 10%, 1W, Comp.	01121	GB	R2-10	30
R202	Resistor, 100kΩ, 10%, 1/2W, Comp.	01121	EB	R1-100K	30
J201	Connector, 10-Pin	22526	20052	CS-237	30
J202	Connector, 5-Pin	22526	20370	CS-251	30
J203	Connector, 10-Pin	22526	20052	CS-237	30
J204	Receptacle, 15-Pin	09922	PSC4SS1512	CS-175	30
J205	Socket (for DS201)	72619	7538XP50	SO-58	30
J206	Connector, 5-Pin	22526	20370	CS-251	30
T201	Transformer	80164	—	TR-136	30
DS201	Pilot Lamp	03797	CG03ACSN110	PL-52	3
S201	Switch, "LINE"	80164	SW-151	SW-151	3
S202	Switch, "POWER ON"	80164	—	SW-271	—
F201	Fuse, Slo-Blo, 1/8 A, 3 AG	71400	MDL	FU-20	3
P201	Power Cord	70903	172585	CO-6	3
J207	Receptacle, 4-Pin	02660	126-1429	CS-163	3
J208	Receptacle, 4-Pin	02660	126-1429	CS-163	3
J209	Receptacle, 4-Pin	02660	126-1429	CS-163	3

CODE—TO—NAME LIST

CODE TO NAME List of Suggested Manufacturers.
Reference: Federal Supply Code for Manufacturers, Cataloging Handbook H4-2.

00656	Aerovox Corp. 740 Belleville Ave. New Bedford, Mass. 02741
00686	Film Capacitors, Inc. 100 Eighth St. Passaic, N.J.
01121	Allen-Bradley Corp. 1201 South 2nd St. Milwaukee, Wisc. 53204
01295	Texas Instruments, Inc. Semiconductor-Components Div. Dallas, Texas 75231
01686	RCL Electronics, Inc. 195 McGregor St. Manchester, N.H. 03102
02101	Varo Inc. Electrokinetics Div. Santa Barbara, Calif. 93102
02660	Amphenol Corp. 2801 South 25th Ave. Broadview, Ill. 60153
02734	Radio Corp. of America Defense Electronic Products Camden, N.J.
02735	Radio Corp. of America Receiving Tube Div. Somerville, N.J.
02777	Hopkins Engineering Co. 12900 Foothill Blvd. San Fernando, Calif. 91342
02985	Tepro Electric Corp. 5 St. Paul St. Rochester, N.Y. 14604
03508	General Electric Co. Semiconductor Products Dept. Syracuse, N.Y. 13201
04009	Arrow-Hart & Hegeman Electric Co. 103 Hawthorne St. Hartford, Conn. 06106
04713	Motorola Semiconductor Prod. Inc. 5005 E. McDowell Rd. Phoenix, Ariz. 85008
05079	Tansistor Electronics, Inc. 1000 West Road Bennington, Vt. 05201
05397	Union Carbide Corp. Electronics Div. New York, N.Y. 10017
06751	Components, Inc. Arizona Div. Phoenix, Ariz. 85019
06980	Varian Assoc. EIMAC Div. 301 Industrial Way San Carlos, Calif. 94070
07137	Transistor Electronics Corp. Hwy. 169 - Co. Rd. 18 Minneapolis, Minn. 55424
07263	Fairchild Camera & Inst. Corp. 313 Frontage Road Mountain View, Calif.
07716	IRC, Inc. 2850 Mt. Pleasant Burlington, Iowa 52601
08811	GL Electronics Div. of GL Industries, Inc. Westville, N.J. 08093
09052	Gulton Industries, Inc. Alkaline Battery Div. Metuchen, N.J.
09823	Burgess Battery Co. Div. of Servel Inc. Freeport, Ill.
09922	Burndy Corp. Richards Ave. Norwalk, Conn. 06852
10582	CTS of Asheville Inc. Mills Gap Road Skyland, N.C.
11502	IRC Inc. Greenway Road Boone, N.C. 28607
11837	Electro Scientific Indus., Inc. 13645 NW Science Park Dr. Portland, Or. 97229
12040	National Semiconductor Corp. Commerce Drive Danbury, Conn. 06813
12065	Transitron Electronic Corp. 144 Addison St. East Boston, Mass.
12697	Clarostat Mfg. Co., Inc. Lower Washington St. Dover, N.H. 03820
12954	Dickson Electronics Corp. 302 S. Wells Fargo Ave. Scottsdale, Ariz.
13050	Potter Co. Highway 51 N. Wesson, Miss. 39191
13327	Solitron Devices, Inc. 256 Oak Tree Road Tappan, N.Y. 10983
13934	Midwec Corp. 602 Main Oshkosh, Nebr. 69154
14655	Cornell-Dubilier Electric Corp. 50 Paris Street Newark, N.J.
14659	Sprague Electric Co. P.O. Box 1509 Visalia, Calif. 93278
15238	ITT Semiconductors Div. of ITT Corp. Lawrence, Mass. 01841
15909	Daven Div. of T.A. Edison Ind. McGraw Edison Co. Livingston, N.J.
16170	Teledyne Systems Co. Communications Div. Los Angeles, Calif. 90066
17554	Components, Inc. Smith St. Biddeford, Ma. 04005
23020	General Reed Co. 174 Main St. Metuchen, N.J. 08840
24655	General Radio Co. 22 Baker Ave. West Concord, Mass. 01781
27682	Hathaway Instruments, Inc. 5800 E. Jewell Ave. Denver, Colorado 80222
28520	Heyman Mfg. Co. 147 N. Michigan Ave. Kenilworth, N.J.
29309	Richey Electronics Inc. 1307 Dickerson Rd. Nashville, Tenn. 37213
35529	Leeds and Northrup 4901 Stenton Ave. Philadelphia, Pa. 19144
37942	Mallory, P. R. and Co., Inc. 3029 E. Washington St. Indianapolis, Ind. 46206
44655	Ohmite Mfg. Co. 3601 Howard St. Skokie, Ill. 60076
53201	Sangamo Electric Co. 1301 North 11th Springfield, Ill. 62705
54294	Shallcross Mfg. Co. 24 Preston St. Selma, N.C.
56289	Sprague Electric Co. North Adams, Massachusetts
58474	Superior Electric Co., The 383 Middle St. Bristol, Conn. 06012
61637	Union Carbide Corp. 270 Park Ave. New York, N.Y. 10017

CODE TO NAME List (Continued).

63060	Victoreen Instrument Co. 5806 Hough Ave. Cleveland, Ohio 44103
70309	Allied Control Co., Inc. 2 East End Ave. New York, N.Y.
70903	Belden Mfg. Co. 415 So. Kilpatrick Chicago, Ill. 60644
71002	Birnbach Radio Co., Inc. 147 Hudson St. New York, N.Y.
71279	Cambridge Thermionic Corp. 430 Concord Avenue Cambridge, Mass.
71400	Bussmann Mfg. Div. of McGraw-Edison Co. St. Louis, Mo.
71450	CTS Corp. 1142 W. Beardsley Ave. Elkhart, Ind.
71468	ITT Cannon Electric, Inc. 3208 Humbolt St. Los Angeles, Calif. 90031
71590	Centralab Div. of Globe-Union, Inc. Milwaukee, Wisc. 53212
71785	Cinch Mfg. Co. and Howard B. Jones Div. Chicago, Ill. 60624
72619	Dialight Corp. 60 Stewart Ave. Brooklyn, N.Y. 11237
72653	G-C Electronics Co. 400 S. Wyman Rockford, Ill. 61101
72699	General Instrument Corp. Capacitor Division Newark, N.J. 07104
72982	Erie Technological Prods Inc. 644 W. 12th St. Erie, Pa. 16512
73138	Beckman Instruments, Inc. Helipot Division Fullerton, Calif. 92634
73445	Amperex Electronic Co., Div. of North American Philips Co., Inc. Hicksville, N.Y.
73690	Elco Resistor Co. 1158 Broadway New York, N.Y.
74276	Signalite Inc. 1933 Heck Ave. Neptune, N.J. 07753
74970	Johnson, E. F., Co. 297 Tenth Ave. S.W. Waseca, Minn. 56093
75042	IRC Inc. 401 North Broad St. Philadelphia, Pa. 19108
75915	Littlefuse, Inc. 800 E. Northwest Hwy. Des Plaines, Ill. 60016
76055	Mallory Controls, Div. of Mallory P. R. & Co., Inc. Frankfort, Ind.
76493	Miller, J. W. Co. 5915 S. Main St. Los Angeles, Calif. 90003
76545	Mueller Electric Co. 1583 E. 31st St. Cleveland, Ohio 44114
77764	Resistance Products Co. 914 S. 13th St. Harrisburgh, Pa. 17104
79727	Continental-Wirt Electronics Corp. Philadelphia, Pa.
80164	Keithley Instruments, Inc. 28775 Aurora Road Cleveland, Ohio 44139
80294	Bourns, Inc. 6135 Magnolia Ave. Riverside, Calif. 92506
81073	Grayhill, Inc. 561 Hillgrove Ave. La Grange, Ill. 60525
81483	International Rectifier Corp. 1523 East Grand Ave. El Segundo, Calif.
82389	Switchcraft, Inc. 5527 N. Elston Ave. Chicago, Ill. 60630
83125	General Instrument Corp. Capacitor Division Darlington, S.C. 29532
83330	Smith, Herman H., Inc. 812 Snediker Ave. Brooklyn, N.Y. 11207
83594	Burroughs Corp. Electronic Components Div. Plainfield, N.J. 07061
83701	Electronic Devices, Inc. Brooklyn, New York
84171	Arco Electronics, Inc. Community Drive Great Neck, N.Y. 11022
84411	TRW Capacitor Div. 112 W. First St. Ogallala, Nebr.
84970	Sarkes Tarzian, Inc. E. Hillside Dr. Bloomington, Ind.
86684	Radio Corp. of America Electronic Components & Devices Harrison, N.J.
87216	Philco Corp. Lansdale Div., Church Rd. Lansdale, Pa. 19446
90201	Mallory Capacitor 3029 East Washington Indianapolis, Ind. 46206
90303	Mallory Battery Co. Tarrytown, New York
91637	Dale Electronics, Inc. P.O. Box 609 Columbus, Nebr. 68601
91662	Elco Corp. Willow Grove, Pennsylvania
91737	Gremar Mfg. Co., Inc. 7 North Ave. Wakefield, Mass.
91802	Industrial Devices Inc. 982 River Rd. Edgewater, N.J. 07020
91929	Honeywell Inc. Micro Switch Div. Freeport, Ill. 61032
93332	Sylvania Electric Products, Inc. Semiconductor Products Div. Woburn, Mass.
93656	Electric Cord Co. 1275 Bloomfield Ave. Caldwell, N.J.
94144	Raytheon Co., Industrial Operation Components Div. Quincy, Mass.
94154	Tung-Sol Electric, Inc. Newark, New Jersey
94310	Tru-Ohm Products Memcor Components Div. Huntington, Ind. 46750
94696	Magnecraft Electric Co. 5579 North Lynch Chicago, Ill.
95348	Gordos Corp. 250 Glenwood Ave. Bloomfield, N.J. 07003
95712	Dage Electric Co., Inc. Hurricane Road Franklin, Ind.
97933	Raytheon Co. Components Div. Semiconductor Operation Mountain View, Calif.
99120	Plastic Capacitors, Inc. 2620 N. Clybourn Ave. Chicago, Ill.

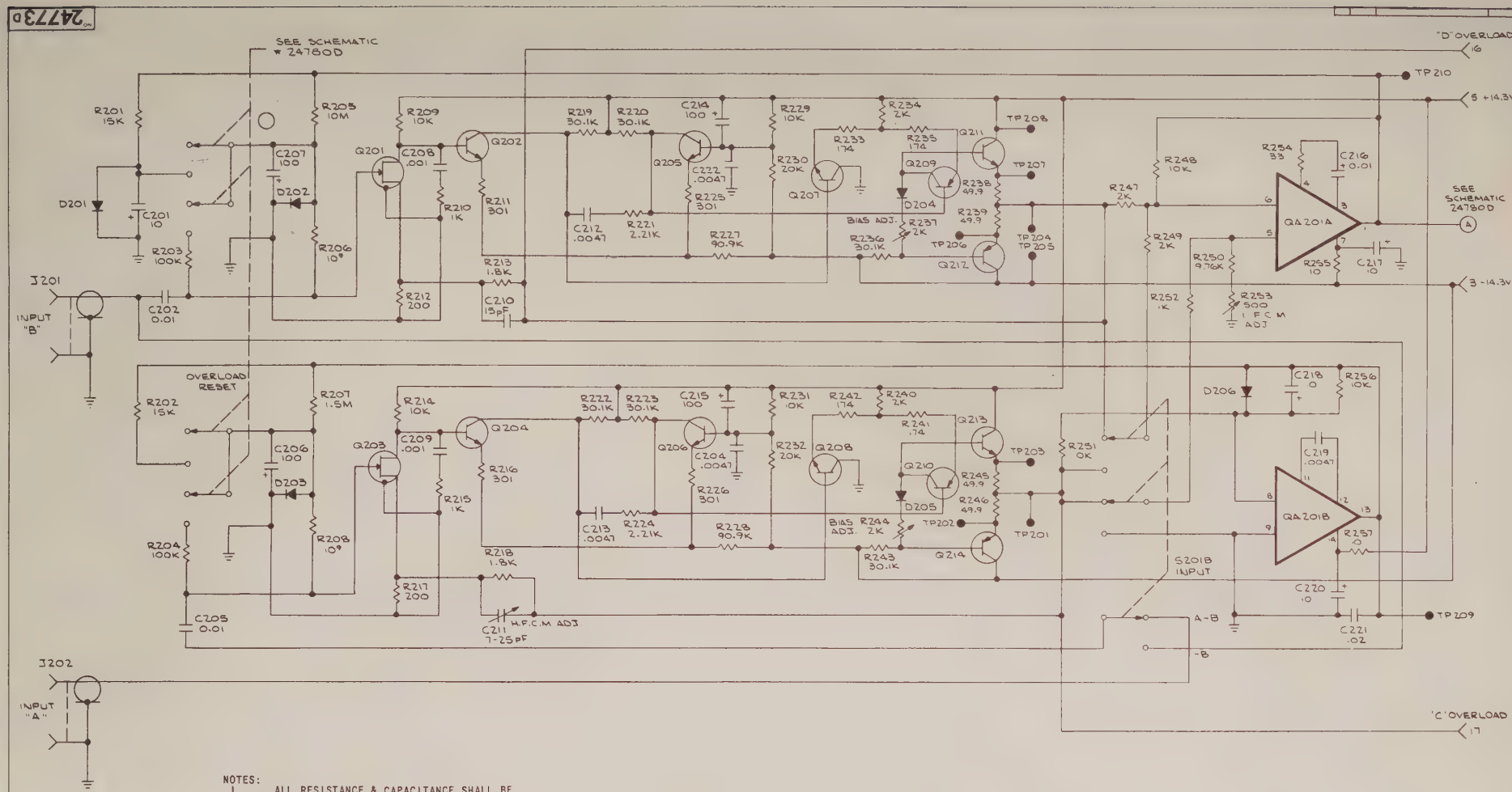

NOTES:

1. ALL RESISTANCE & CAPACITANCE SHALL BE DESIGNATED IN OHMS & MICROFARADS UNLESS OTHERWISE NOTED.
2. ○ FRONT PANEL CONTROL
3. M MEGOHM
4. K 1000 OHM
5. pF PICOFARAD

HIGHEST SCHEMATIC DESIGNATIONS				
D206	C222	Q214	QA201	S201
R257	J202			

SCHEMATIC DESIGNATIONS NOT USED				
C203				

KEITHLEY INSTRUMENTS

SCHEMATIC MOTHER BOARD PART # 1 PC-294

24773D

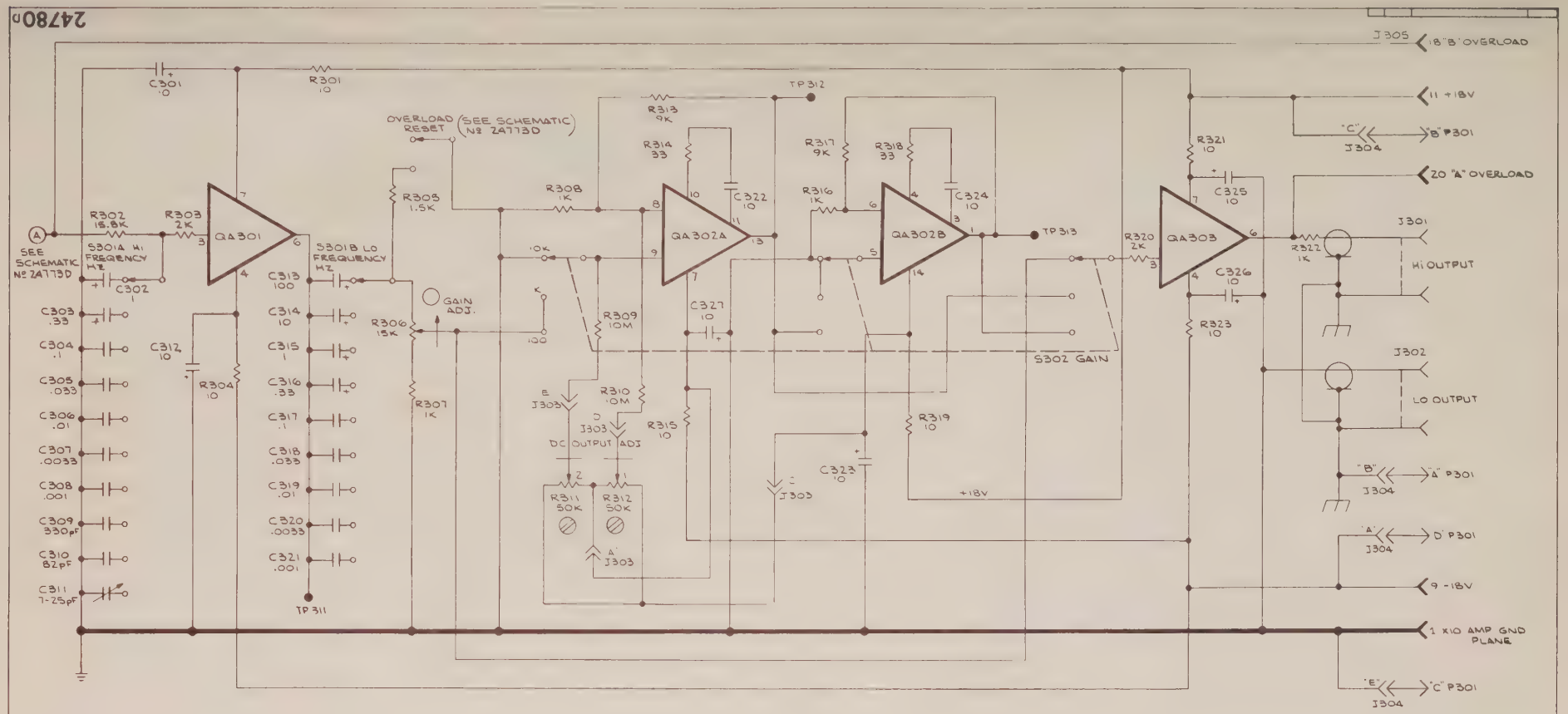

NOTES:

1. ALL RESISTANCE & CAPACITANCE SHALL BE DESIGNATED IN OHMS & MICROFARADS UNLESS OTHERWISE NOTED.
2. ○ FRONT PANEL CONTROL
3. ◐ INTERNAL SCREWDRIVER ADJ.
4. M MEGOHM
5. K 1000 OHM
6. pf PICOFARAD
7. ⊘ REAR PANEL CONTROL

HIGHEST SCHEMATIC DESIGNATIONS				
C327	R323	QA303	J305	
S302	P301			

SCHEMATIC DESIGNATIONS NOT USED				

KEITHLEY INSTRUMENTS

SCHEMATIC MOTHER BOARD PART 2

24780D

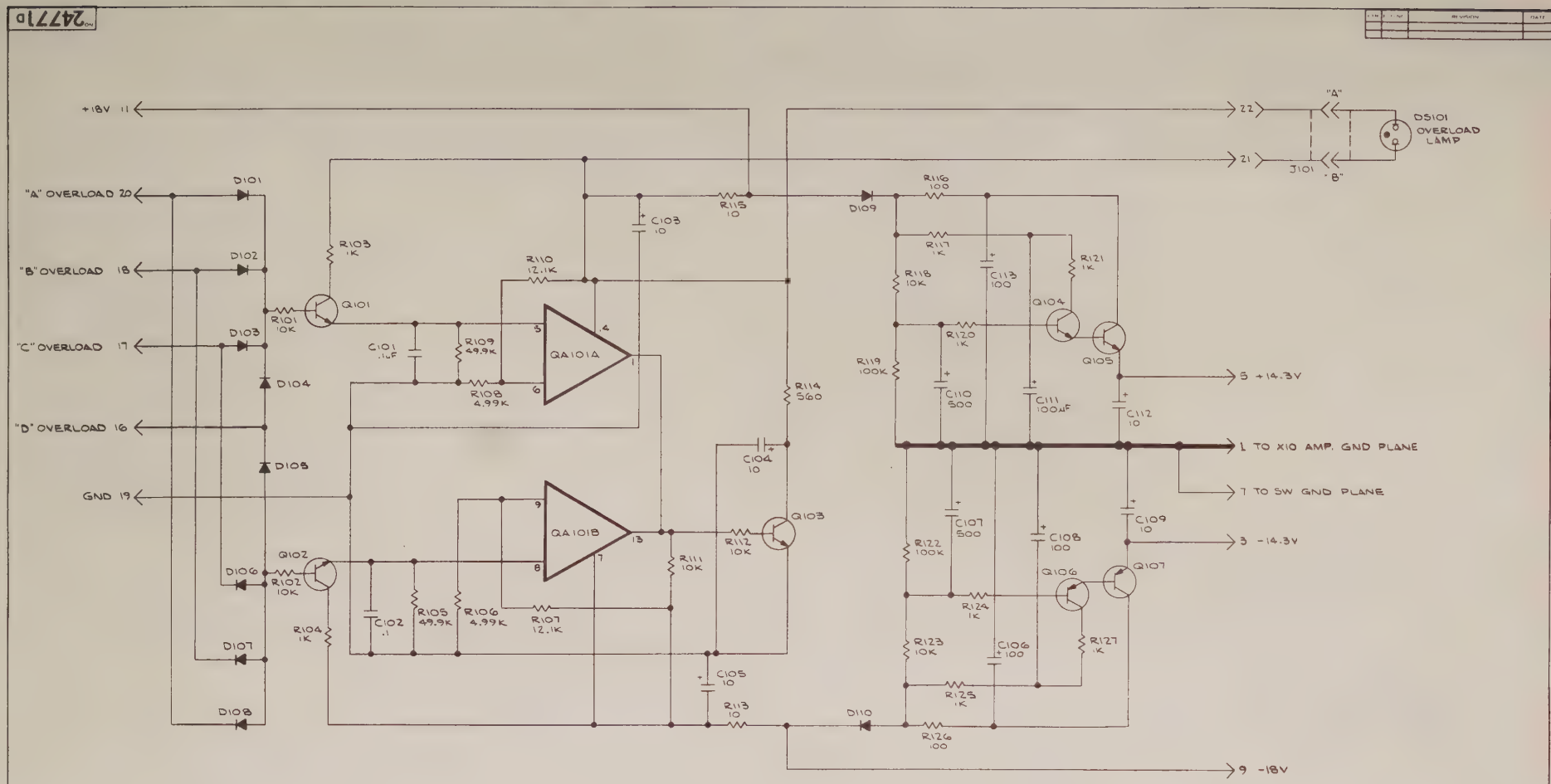

NOTES:

1. ALL RESISTANCE AND CAPACITANCE SHALL BE DESIGNATED IN OHMS & MICROFARADS UNLESS OTHERWISE NOTED.
2. K 1000 OHM
3. ALL RESISTORS ±10% TOLERANCE. UNLESS OTHERWISE NOTED.
4. ALL CAPACITORS ±10% TOLERANCE UNLESS OTHERWISE NOTED.

HIGHEST SCHEMATIC DESIGNATIONS				
D110	R127	C113	Q107	P101
QA10	J101	DS101		

SCHEMATIC DESIGNATION NOT USED				

103A			
MODEL	NEXT ASSEMBLY	QTY	
USED ON			

KEITHLEY INSTRUMENTS

DATE
DRN D.L.
MATERIAL
FINISH

TITLE SCHEMATIC PC-293 FILTER & OVERLOAD

NO. 24771D

AR
21715

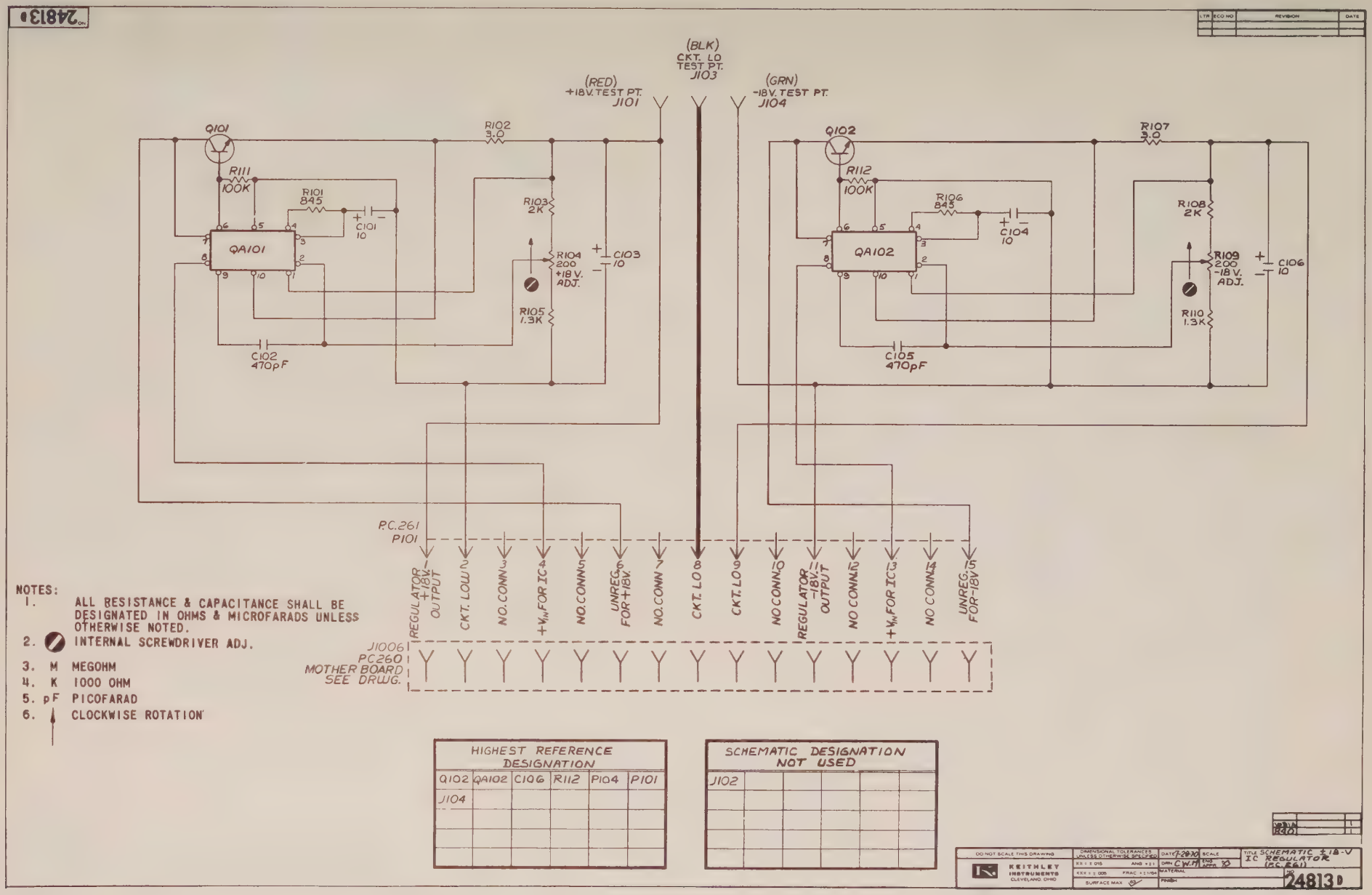

24813D
LTR
ECO NO
REVISION
DATE
(BLK)
CKT. LO
TEST PT.
J103
(RED)
+18V. TEST PT.
J101
(GRN)
-18V. TEST PT.
J104
Q101
R111
100K
R101
845
C101
10
QA101
R102
3.0
R103
2K
R104
200
+18V.
ADJ.
C103
10
R105
1.3K
C102
470pF
Q102
R112
100K
R106
845
C104
10
QA102
R107
3.0
R108
2K
R109
200
-18V.
ADJ.
C106
10
R110
1.3K
C105
470pF
P.C.261
P101
REGULATOR +18V. OUTPUT
CKT. LOW
NO. CONN.
+VIN FOR IC
NO. CONN.
UNREG. FOR +18V.
NO. CONN
CKT. LO
CKT. LO
NO CONN.
REGULATOR -18V. OUTPUT
NO CONN.
+VIN FOR IC
NO CONN.
UNREG. FOR -18V
J1006
PC260
MOTHER BOARD
SEE DRWG.
NOTES:
1. ALL RESISTANCE & CAPACITANCE SHALL BE DESIGNATED IN OHMS & MICROFARADS UNLESS OTHERWISE NOTED.
2. INTERNAL SCREWDRIVER ADJ.
3. M MEGOHM
4. K 1000 OHM
5. pF PICOFARAD
6. CLOCKWISE ROTATION
HIGHEST REFERENCE DESIGNATION
Q102 QA102 C106 R112 P104 P101
J104
SCHEMATIC DESIGNATION NOT USED
J102
DO NOT SCALE THIS DRAWING
KEITHLEY INSTRUMENTS CLEVELAND, OHIO
DIMENSIONAL TOLERANCES UNLESS OTHERWISE SPECIFIED
DATE 7-28-70
SCALE
DRN C.W.M.
ENG APPR.
MATERIAL
FINISH
SURFACE MAX
TITLE SCHEMATIC ±18-V IC REGULATOR (P.C.261)
NO 24813D

24784D

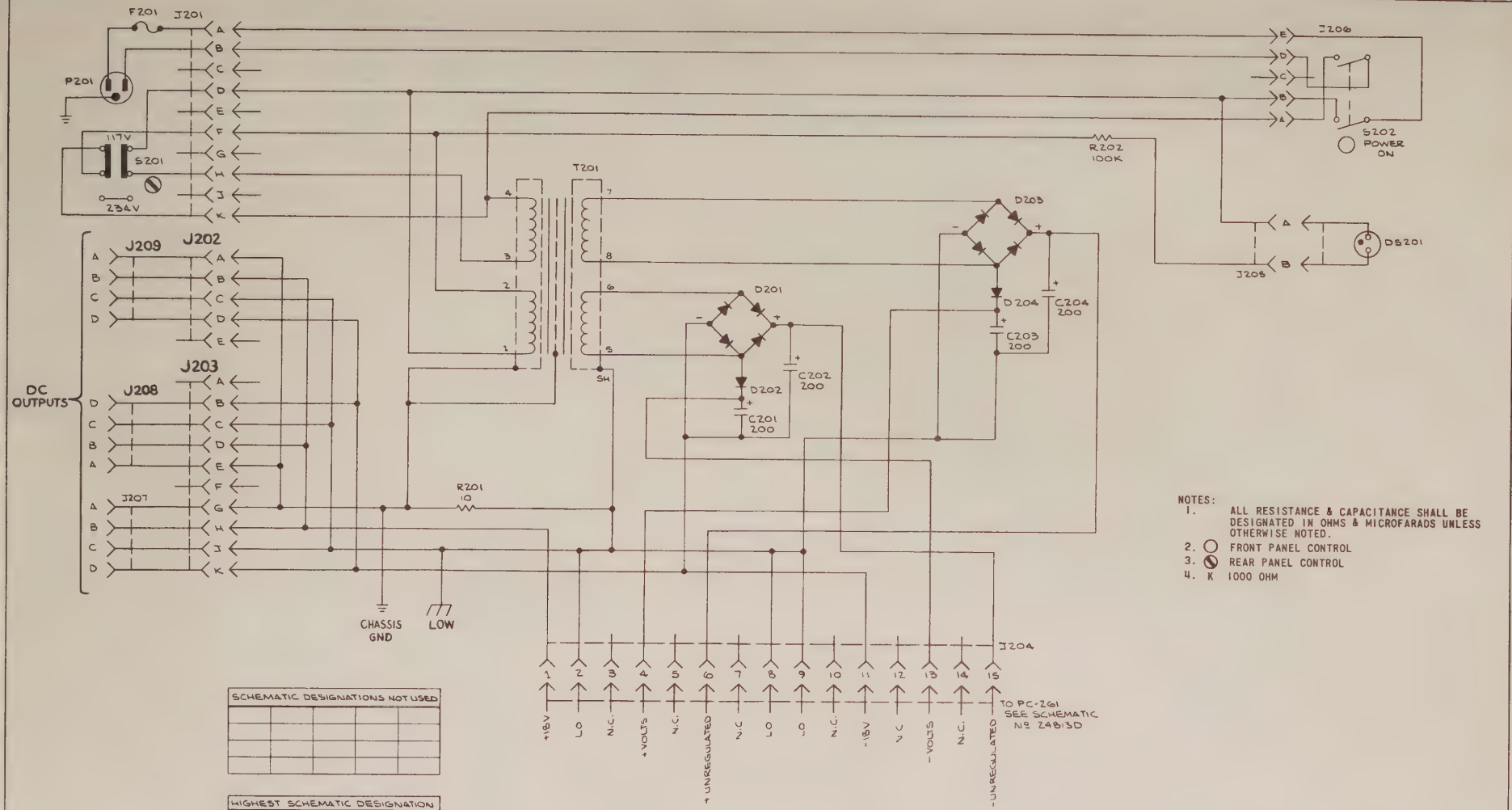

NOTES:

1. ALL RESISTANCE & CAPACITANCE SHALL BE DESIGNATED IN OHMS & MICROFARADS UNLESS OTHERWISE NOTED.
2. ○ FRONT PANEL CONTROL
3. ⊘ REAR PANEL CONTROL
4. K 1000 OHM

SCHEMATIC DESIGNATIONS NOT USED				

HIGHEST SCHEMATIC DESIGNATION				
T201	D204	R202	F201	S202
DS201	C204	J207		

KEITHLEY INSTRUMENTS

DATE 10-19-70 SCALE — DRN D.L.

TITLE SCHEMATIC PC-295 MOTHER BOARD

MATERIAL

FINISH

NO. 24784D

KEITHLEY INSTRUMENTS, INC.
REPAIR & CALIBRATION FORM

MODEL NO. _____
SERIAL NO. _____

DATE _____

R-

SHIP INSTRUMENT & FORM TO:

SALES SERVICE DEPT.
KEITHLEY INSTRUMENTS, INC.
28775 AURORA ROAD
CLEVELAND, OHIO 44139

FROM:

USER'S NAME _____
RETURN ADDRESS _____
_____
CITY _____
STATE _____ ZIP _____
TELEPHONE _____

1. REASON FOR RETURN. Check appropriate box.
   - ☐ Repair and Recalibration
   - ☐ Recalibration only. (If repairs are required to meet specifications, an additional repair charge will be added to recalibration cost.)

2. CALIBRATION REPORT. Specify report desired. (See reverse side of form for details.)
   - ☐ Calibration Report (Certified Traceable to N.B.S.)
   - ☐ Calibration Report (Production Calibration Equipment at the factory)
   - ☐ Certificate of Compliance

3. DESCRIPTION OF PROBLEM. (Include a block diagram of instruments connected in system. Recorder charts or other data would be helpful.)

_____
_____
_____
_____

Is problem constant or intermittent? _____

4. OPERATING CONDITIONS.
   Control setting (range, multiplier, etc.) _____
   Line voltage used _____ Line frequency used _____
   Temperature _____ °F Temperature variation ± _____ °F
   Humidity (high, medium, low) _____
   Other (please specify, such as line transients, etc.) _____

5. EQUIPMENT USED.
   Signal source _____ Source impedance _____
   Readout device _____ (Recorder, oscilloscope, etc.)
   Cables used _____ Length _____

6. ADDITIONAL INFORMATION. Please indicate any other pertinent information which may help the Keithley Repair and Calibration Department. (If repairs or modifications have been made to instrument by other than Keithley personnel, please specify below.)

_____
_____
_____

CALIBRATIONS AVAILABLE AT KEITHLEY INSTRUMENTS. EFFECTIVE: FEBRUARY 1, 1972

Listed and defined below are the four types of calibrations and their associated report formats which are presently available at Keithley Instruments. They fall into the following categories:

1. Report of Calibration Certified Traceable to the National Bureau of Standards
2. Calibration Report
3. Certificate of Compliance
4. Recalibration

All calibration and certification performed by Keithley Instruments is in accord with MIL-C-45662A.

Prices shown below are in addition to repair charges for any work necessary to place a customer's unit into first class condition prior to the calibration.

1. Report of Calibration Certified Traceable to the National Bureau of Standards.
This is a completely documented report, including all basic errors or deviations from nominal settings on appropriate ranges, terminals, dials, etc. Work is performed using the primary standards of the company with secondary transfers kept to a minimum. The NBS test numbers for the latest recalibration of the primary standards are furnished.

By definition, the above is performed in our Standards Laboratory so that random operator induced error is minimized and maximum protection to the equipment used is maintained.

This type of calibration is not recommended for instruments with a basic inaccuracy of 1% or greater. The precision involved in this report makes it uneconomical for such instruments. The Calibration Report listed below (No. 2) would be better suited in this case.

The Report of Calibration Certified Traceable to the National Bureau of Standards is available on the following instruments at the prices listed:

Model 140	$275	Model 5155-10^8	$ 50
Model 260	$225	Model 5155-10^9	$ 50
Model 261	$375	Model 5155-10^{10}	$ 50
Model 662	$275	Model 5155-10^{11}	$ 60
Model 5155 (Complete Set)	$295	Model 5155-10^{12}	$ 60
		Model 5155-10^{13}	$ 80

2. Calibration Report.
This report shows only the cardinal range, terminal, dial, etc. errors as determined by production calibration equipment and personnel. The production equipment is maintained traceable by transfer techniques against the primary standards maintained by the company. We attest to this fact and list basic deviations from nominal but the conditions of calibration are not as precisely controlled as the previous report nor are NBS test numbers supplied.

This report is available for any instrument in our line. The following price has been established for this report:

Model 261 . . . . . $ 60
Prices for other units can be estimated upon request.

3. Certificate of Compliance.
This is merely a restatement of the basic guarantee that the instrument was calibrated on equipment that is maintained by our standards personnel against primary standards. No report is issued.

This Certificate of Compliance is available at no charge for any instrument with the exception of the Model 261.

A newly purchased Model 261 or one returned for repair or recalibration is automatically supplied with a Calibration Report (as described in (2) above). The nature of this instrument makes it necessary to complete this report to ascertain specified accuracy. This Calibration Report is forwarded to the customer with the instrument. The $60 charge is incorporated as part of the normal calibration charge of the Model 261.

4. Recalibration.
This is a recalibration of the instrument according to our factory calibration procedures.

Model 260 . . . . . $ 90 (No report supplied. A Certificate of Compliance can be had at no charge if requested).

Model 261 . . . . . $ 60 (Calibration Report as described in (2) above is supplied. See (3) for explanation).

All other instruments are on a time and material basis for the particular unit involved.

All prices subject to change without prior notification.

KEITHLEY INSTRUMENTS, INC.

28775 AURORA ROAD • CLEVELAND, OHIO 44139 • (216) 248-0400
TELEX: 98-5469 • CABLE: KEITHLEY